CITY OF
CLAREMONT

The Claremont City Council will hold a public meeting on Wednesday, September 9, 2026, at 6:00 p.m. in the Council Chambers of City Hall. DIFFERENT TIME

AGENDA

6:00 PM 1. PLEDGE OF ALLEGIANCE

6:32 PM 2. ROLL CALL

6:04 PM 3. NON PUBLIC RSA 91-A:3 II(d)

6:34 PM 4. AGENDA CHANGES

6:35 PM 5. REPORT OF THE SECRETARY
Minutes of August 17, 2026, City Council Meeting(s)
Minutes of August 26, 2026, City Council Meeting(s)

6:37 PM 6. MAYOR'S NOTES

6:42 PM 7. CITY MANAGER'S REPORT
A. General Remarks

6:45 PM 8. APPOINTMENT TO BOARDS AND COMMITTEES

6:50 PM 9. CITIZEN'S FORUM (Comments on Non-agenda Items Limited to 5 Minutes per Speaker (Council Rule 24))

10. OLD BUSINESS

7:00 PM A. Resolution 2026-18 Amended and Restated – NBRC Sugar River Revitalization Grant – Public Hearing (City Manager/Director of Planning and Development)

11. NEW BUSINESS (*Times are estimates and subject to change)*

7:05 PM A. License for Underground Conduit – Fidium Fiber (City Manager/Director of Public Works)

7:15 PM B. PILOT - Kearsarge Claremont LLC (City Manager)

7:30 PM C. Resolution 2027-18 Authorization to Borrow for Vehicle Lease – Public Hearing (City Manager/Director of Public Works)

7:45 PM 12. COMMITTEE REPORTS

7:50 PM 13. FUTURE AGENDA ITEMS AND DIRECTIVES

7:55 PM 14. CONSULTATION WITH LEGAL COUNSEL

8:00 PM 15. ADJOURNMENT

PLEASE NOTE: Claremont City Council's next scheduled meeting will be on Wednesday, September 23, 2026, at 6:30 p.m. in the Council Chambers of City Hall.

Contemporaneous meeting notes for use with other resources in preparation of draft minutes
MEMBERS – PERSONS appearing – BRIEF DESCRIPTION – DECISIONS. RSA 91-A:2.

The Claremont City Council held an emergency meeting on Monday August 17, 2026, in the Council Chambers of City Hall.

The meeting was called to order by Mayor Girard at 6:00 p.m.

Members of the Council present:

Ward I Councilor Andrew O'Hearne
Ward II Councilor William Greenrose
Ward III Councilor Christopher Irish
Assistant Mayor Debora Matteau
At-Large Councilor Christopher Cogswell
At-Large Councilor Wayne Hemingway
At-Large Councilor William Limoges
At-Large Councilor Nicholas Koloski – *via phone (Oxford Maine, alone)*
Mayor Dale Girard

NON-PUBLIC RSA 91-A:3, II (d) Consideration of the acquisition, sale, or lease of real or personal property.

City of Claremont
Nonpublic Session Minutes
City Council

Members Present

O'Hearne
Cogswell
Greenrose
Matteau
Koloski – via phone
Hemingway
Irish
Girard

Non-Members Invited to Attend Nonpublic Session

Interim City Manager, Rick Bergeron

Motion to enter Nonpublic Session made by Assistant Mayor Matteau seconded by Councilor Greenrose.

DRAFT

Contemporaneous meeting notes for use with other resources in preparation of draft minutes
MEMBERS – PERSONS appearing – BRIEF DESCRIPTION – DECISIONS. RSA 91-A:2.

Specific Statutory Reason cited as foundation for the nonpublic session:

____ RSA 91-A:3, II(d) *Consideration of the acquisition, sale, or lease of real or personal property.*

Roll Call vote to enter nonpublic session: Majority vote required
List roll:

O'Hearne - yes
Cogswell - yes
Greenrose - yes
Matteau - yes
Koloski - yes
Hemingway - yes
Irish - yes
Girard - yes

Motion: PASSED

Entered nonpublic session at 6:02 p.m.

Stop recording public meeting (if applicable)

Description of matters discussed and decisions made (***note: any votes taken in non-public must be by roll call vote, with the vote of each member included in the minutes of the nonpublic session and should be either repeated or disclosed immediately upon exiting non-public session.***)

Discussed sale or lease of parking spaces for 17 Water Street project.

Motion to leave nonpublic session and return to public session by Assistant Mayor Matteau seconded by Councilor Greenrose. (**Majority vote by roll call.**)
List roll:

O'Hearne - yes
Cogswell - yes
Greenrose - yes
Matteau - yes
Koloski - yes
Hemingway - yes
Irish - yes
Girard - yes

Motion: PASSED

Contemporaneous meeting notes for use with other resources in preparation of draft minutes MEMBERS – PERSONS appearing – BRIEF DESCRIPTION – DECISIONS. RSA 91-A:2.

Public session reconvened at 7:11 p.m.

Motion to adjourn at 7:11 made by Assistant Mayor Matteau and seconded by Councilor Limoges.

Motion: PASSED

These minutes recorded by: Assistant Mayor Matteau

Respectfully Submitted,

Julia A. Bizzarro
Clerk to the Council

DRAFT

Contemporaneous meeting notes for use with other resources in preparation of draft minutes
MEMBERS – PERSONS appearing – BRIEF DESCRIPTION – DECISIONS. RSA 91-A:2.

The Claremont City Council held a meeting on Wednesday, August 26, 2026, in the Council Chambers of City Hall.

The meeting was called to order by Mayor Girard at 6:30 p.m.

Members of the Council present:

Ward I Councilor Andrew O'Hearne
Ward II Councilor William Greenrose
Ward III Councilor Christopher Irish
Assistant Mayor Debora Matteau – absent
At-Large Councilor Christopher Cogswell
At-Large Councilor Wayne Hemingway
At-Large Councilor William Limoges – absent
At-Large Councilor Nicholas Koloski
Mayor Dale Girard

Also present:

Richard Bergeron, Interim City Manager

AGENDA CHANGES
None.

REPORT OF THE SECRETARY

A motion was made by Councilor Hemingway and seconded by Councilor Greenrose to accept the minutes of the August 12, 2026, City Council meeting.

Voice vote:
O'Hearne - yes
Cogswell – yes
Greenrose - yes
Koloski – yes
Hemingway – yes
Irish – yes
Girard – yes
Motion carried 7-0

DRAFT

Contemporaneous meeting notes for use with other resources in preparation of draft minutes
MEMBERS – PERSONS appearing – BRIEF DESCRIPTION – DECISIONS. RSA 91-A:2.

MAYOR'S NOTES

Mayor Girard announced former Assistant Mayor, City Councilor, and Assistant Fire Chief Vic Bergeron passed away last week, Councilor Limoges's mother passed away this week, and Arlene Merrill who had been very involved in the community, also passed away and asked for a moment of silence.

Mayor Girard read a Proclamation for Mikros Technologies.

Mayor Girard reminded residents of the Primary Election for state, county, and federal offices on September 8.

Parks and Recreation will be hosting a September 11th remembrance stair climb memorial starting at 8:30am at the Visitor's Center.

Claremont Kiwanis will be hosting the Brewfest on September 19th at the Visitors Center Green.

CITY MANAGER'S REPORT

Manager Bergeron introduced the City's new Library Director Jim Allen.

Jim Allen, Library Director introduced himself and noted being a Claremont resident since 2003 and Library Director for 19 years and is thrilled to now serve his community.

Manager Bergeron announced the City tentatively hired a new Finance Director starting in September. Planning and Development have hired a new Deputy Building Inspector who will also be starting in September. An offer is being made for a Parks and Recreation Director.

CITIZEN'S FORUM

Mayor Girard gave reminder that Citizen's forum is designed to allow you the opportunity to make the Council aware of your concerns. Please state your name and ward number, we ask you to address your concerns directly to the Council. The Council Manager will not be responding to you during this time. You are limited to five minutes on any non-agenda items. In the back of the room please write down your contact information if you'd like to be contacted as well as your concern on the clipboard for follow-up

Contemporaneous meeting notes for use with other resources in preparation of draft minutes
MEMBERS – PERSONS appearing – BRIEF DESCRIPTION – DECISIONS. RSA 91-A:2.

Eric Dean Rouleau, Vice Chair of the Tolles Home raised concerns regarding board governance and accountability, stating that since being appointed it has been unclear who the board answers to. He questioned whether an individual member may act on behalf of the board without a quorum or formal vote and requested clarification regarding the boundaries and responsibilities of each role. He also questioned the board's authority and process for removing a member under the bylaws. With two new members recently appointed, he asked how often the Chair is appointed or elected and gave the following handout to Council.

Eric Dean Rouleau Tolles Home Trustee Vice Chair
Recieved Aug 8th, 2023 via email 8.26.2026

E2
of 4

SUMMARY OF EVENTS LEADING TO CURRENT SITUATION

A Tolles Home tenant's lease was changed mid lease, causing said tenant to pay $200/month additional for benefits included in the original lease. This change did not impact any other tenants.

When the new site manager became aware of the situation, he instructed the tenant not to pay the additional $200/month and honored the original lease agreement.

I requested that the Treasurer issue a check in the amount of $6066.66 to make the tenant whole for the months said tenant paid the additional $200/month.

I understand that the Tolles Home Purchasing Policies and Procedures requires board approval for expenditures over $1000. To my mind the $6,066.66 check was a reimbursement and not a new expenditure. This mindset was affirmed when the Treasurer agreed and instructed the bookkeeper to cut said check.

If this is out of compliance with the Tolles Home Purchasing Policies and Procedures, then the Treasurer and I are at fault.

Contemporaneous meeting notes for use with other resources in preparation of draft minutes
MEMBERS – PERSONS appearing – BRIEF DESCRIPTION – DECISIONS. RSA 91-A:2.

I did not make the request for personal gain or benefit. I made this request to make a tenant whole for monies that should not have been collected.

I would like to suggest that a full investigation of this matter be conducted, including the lease change made mid-lease by a prior chair. I am not sure of the legality of that change. Also I would suggest that the conduct of the prior board be investigated. The prior board did not question or hold the chair accountable. I am not sure that that was good stewardship.
Whether or not other blame can be assigned, I understand that I may be held at fault for requesting the check. I take full responsibility for requesting a check to reimburse a tenant and I am prepared to take the consequences. I understand that the Treasurer may be held at fault for having the check cut and distributed.

I will gladly participate in any measures to create clear written policies that could help prevent a string of events like this from happening in the future.

I apologize to the board, the residents and the staff if I have brought any dishonor to the Frances J. Tolles Home.

I will NOT be stepping down.

Karlaine Livingston, Chair (elected August 2025)

Frances J. Tolles Home Board of Trustees
August 18, 2026

Contemporaneous meeting notes for use with other resources in preparation of draft minutes
MEMBERS – PERSONS appearing – BRIEF DESCRIPTION – DECISIONS. RSA 91-A:2.

NEW BUSINESS

Mikros Technologies Presentation

Gina Gavan, The Planning and Development Director introduced Drew Matter, President and CEO of Mikros Technologies. Matter thanked the City for the recognition and noted that Mikros has been located in Claremont since 2000. Mr. Matter reviewed the company's history and expressed its commitment to contributing to the life of the community.

Matter discussed the company's recent growth, including doubling the size of the company, and stated that Mikros intends to remain in Claremont, provide jobs, and continue being part of the community. He recognized Nancy Merrill for welcoming the company to the City.

A slideshow was presented highlighting Mikros Technologies' liquid cooling systems, including an example of a cold plate. Matter discussed the company's significant growth and global expansion through a partnership with Jabil. He described the company's goals, and invited Council and staff to tour the facility, answered questions, and thanked everyone for their support.

Director Gavan also recognized Mikros Technologies was awarded 2026 Business of the Year by Business NH Magazine.

Resolution 2027-17 AARP Grant Acceptance – Public Hearing

Shaun Laplante, Assistant Director of Parks and Recreation explained the grant and requested the approval to accept and expend the funds for the purpose of a pavilion at Moody Park.

A motion was made by Councilor Irish and seconded by Councilor O'Hearne to accept resolution 2027-17.

Councilor Irish read Resolution 2027-17 into the record.

Mayor Girard opened a public hearing, no one spoke. Mayor Girard closed the public hearing.

Roll call :
O'Hearne - yes
Cogswell – yes
Greenrose - yes
Koloski – yes
Hemingway – yes
Irish – yes

Girard – yes
Motion carried 7-0

Interim City Manager-Hour/Compensation Discussion

Council discussed the Interim City Manager's expected work schedule and compensation. When Mr. Bergeron was appointed, the expectation was 30 hours per week; however, Mr. Bergeron has been averaging 40 hours per week. Interim City Manager Bergeron expressed being available five days per week is important to adequately assist department heads and address the demands of the position.

Council discussed increasing his schedule to a minimum of 37 hours, with a preference for 40 hours per week. Mr. Bergeron confirmed that the increased hours would not affect his retirement limitations, as the applicable hour limitation is based on the calendar year.

The Council agreed to set the Interim City Manager's schedule at 40 hours per week with compensation of $60 per hour.

A motion was made by Councilor Koloski and seconded by Councilor O'Hearne to set the Interim City Manager's schedule at 40 hours per week with compensation of $60 per hour.

Roll call:
O'Hearne - yes
Cogswell – yes
Greenrose - yes
Koloski – yes
Hemingway – yes
Irish – yes
Girard – yes
Motion carried 7-0

COMMITTEE REPORTS

Councilor O'Hearne raised concerns regarding issues developing at the Tolles Home Board, and stated that attempts had been made to address the concerns at previous meetings, but the issues have continued. Concerns included possible violations of nonpublic session requirements, actions allegedly taken by the chair outside of board approval, authorization of a $6,000 payment to a tenant without board approval, and changes to an employee's employment status. Additional concerns were raised regarding changes to the site manager's job description, which reportedly created tension between the site manager and the board chair. O'Hearne distributed a letter from Karlaine Livingston for Council review.

Contemporaneous meeting notes for use with other resources in preparation of draft minutes
MEMBERS – PERSONS appearing – BRIEF DESCRIPTION – DECISIONS. RSA 91-A:2.

Interim City Manager Bergeron asked whether O'Hearne believed the meeting held the previous day had been beneficial in addressing the concerns. O'Hearne stated that he did not believe things would change. Mayor Girard expressed hope that changes would result from the meeting and suggested addressing the matter at the next regularly scheduled meeting under Boards and Committees.

Councilor Irish suggested that the discussion be considered more broadly for all boards and committees to ensure members understand and follow proper procedures and is interested in addressing procedural issues rather than individual personalities and noted that boards should be provided with clear direction before removal is considered.

Councilor Cogswell stated the issues may warrant greater public awareness and expressed interest in hearing from other Tolles Home Board members. Councilor Hemingway noted that the board may not be accustomed to working within city government procedures and that it is the Council's responsibility to establish clear boundaries and expectations.

Councilor Koloski suggested gathering more information and bring recommendations back to the Council. Also recommending that all boards and committees request annual training. Councilor Hemingway agreed and suggested providing training followed by a probationary period to ensure procedures are being followed.

Councilor Greenrose noted that there were two separate issues: specific concerns involving the Tolles Home Board and the broader lack of consistency, education, and knowledge regarding board procedures.

The Council agreed to place the matter under Boards and Committees for further discussion at a future meeting, Councilor O'Hearne stated that he would like to assist the City Manager and Mayor in obtaining the appropriate documentation.

Councilor Greenrose stated the Energy Advisory Committee met last week and is in the process of creating a report to bring to Council.

Councilor Koloski noted there may be potential ask from the Arts Committee to borrow funds for the Eagle Restoration.

Director Gavan noted there are two Projects one is a coffee shop on Washington Street, and 21 Water street is converting the 3rd floor to office spaces, and 27 units will be on floors 5,6, and 7.

Contemporaneous meeting notes for use with other resources in preparation of draft minutes
MEMBERS – PERSONS appearing – BRIEF DESCRIPTION – DECISIONS. RSA 91-A:2.

FUTURE AGENDA ITEMS AND DIRECTIVES

Councilor Koloski raised several follow-up items, including a flag light in the park that is not illuminated due to a breaker that continues to trip.

Councilor Koloski also asked about the status of installing a remote or other system to improve the ability to hear participants during meetings, including the proposed Owl system.

Koloski relayed a concern from the Borden Center resident regarding the area at Draper's Corner, where traffic cones have remained in place for more than a month. He asked when the issue would be corrected, noting that there is currently no clear travel path on Pleasant Street before Draper's Corner.

Requested an update and feedback regarding the Downtown City Center conversation, as well as a list of what TIFD district funds are available for.

Koloski also asked where citizens should report issues with traffic pole lights and suggested including a dedicated icon for reporting light pole concerns on the new city website.

Finally, Councilor Koloski raised concerns regarding the sculpture behind the Visitor Center, which was damaged. He asked whether there is a plan to replace or repair the lighting and requested an update on the status of cameras in the area, noting that people have reportedly been routinely climbing on the sculpture

Councilor O'Hearne raised several follow-up items, including flags being lowered to half-staff for Dolly Parton, and requested an update on the lighting in the bullpen area in front of the coffee shop.

Councilor O'Hearne also raised concerns about Pleasant Street, noting that a car counter appears to have damaged or broken the granite, and further noted that granite on the opposite side of the street appears to be buckling.

Councilor O'Hearne also raised concerns about vegetation growing along Pleasant Street, describing it as a "forest" that needs attention.

Councilor Irish suggested a master list of ongoing follow-up items and requests made by the Council.

Councilor Irish raised concerns regarding the appearance of Pleasant Street and asked whether anyone had reached out to the Garden Club for assistance, and suggested exploring options

through the Planning and Zoning Department regarding landlords and rental properties where property owners may not have fulfilled their obligations or where rentals may not be permitted.

Councilor Irish also raised concerns regarding homelessness in Broad Street Park and suggested the possibility of having conversations with the City of Manchester regarding similar issues.

Additional concerns included reports of discarded needles in the New Village area near Mulberry Street, noise from speeding vehicles and loud mufflers on Winter Street, and concerns regarding e-bikes.

Councilor Cogswell stated that he would like to see more structure and suggested reviewing how the City Charter and current form of government operate. He recommended identifying what may be missing or unclear and addressing those issues before a new City Manager begins.

CONSULTATION WITH LEGAL COUNSEL
None.

ADJOURNMENT

At 7:48 p.m., a motion was made by Councilor O'Hearne and seconded by Councilor Greenrose to adjourn.

Voice Vote:
O'Hearne - yes
Cogswell – yes
Greenrose - yes
Koloski – yes
Hemingway – yes
Irish – yes
Girard – yes
Motion carried 7-0

Respectfully Submitted,

Julia A. Bizzarro
Clerk to the Council

DRAFT

CITY OF CLAREMONT

Department of Public Works

8 Grandview Street

Claremont, New Hampshire 03743

Ph: (603) 542-7020

Department of Public Works

August 2026

SUBJECT: August Monthly Report

Highway Division

During the month of August, the team worked on a few continuous trouble areas that often need maintenance with rutting, mud, and washouts on Foisy Hil Road and a section of Skyline Terrace. The team utilized millings and a fabric underlayment for water shedding to improve strengthening both the surface and base to help reduce future maintenance in the area.

In addition, the team had finished painting crosswalks around school zones to ensure markings were clearly defined prior to school being back in session. Roadside mowing and ditching have been ongoing throughout the month, and teams have been out pot hole patching as needed.

(Fabric and Milling application on Foisy Hill)

Cemetery Division

The Cemetery Division continued with mowing, grounds maintenance, and routine operations throughout the month. The department is down to one seasonal employee as the seasonal employees are typically back to school in the fall at various times/dates depending on which schools they attend. The department will be fully staffed once again as we concluded interviews and selected a candidate for a truck driver to fill the vacant role which will be starting at the beginning of September.

CITY OF
CLAREMONT

Department of Public Works

8 Grandview Street

Claremont, New Hampshire 03743

Ph: (603) 542-7020

Utilities Division

The Utilities Division completed its seasonal flushing operations and has dealt with a few water breaks. The staff continues performing routine maintenance activities, including meter appointments and replacements, mowing around reservoirs, pump stations, water storage tanks, and other utility facilities.

(Bank Avenue waterline break 8/28/26)

Several major infrastructure projects also advanced during the month:

- A pre-bid meeting for the Wastewater Treatment Facility Dewatering Upgrade was held on July 30, 2026, with several contractors attending. Once bids are reviewed, Wright-Pierce and City staff will evaluate the proposals and recommend an award.

- The Clay Hill Waterline Replacement Project has been awarded and will commence in the coming weeks. During this time there may be road closures depending on the sections of road they are working in. Advanced notice will be posted online to best inform the traveling public on any potential delays in their travel. (see below map of section to be replaced)

CITY OF CLAREMONT

Department of Public Works

8 Grandview Street

Claremont, New Hampshire 03743

Ph: (603) 542-7020

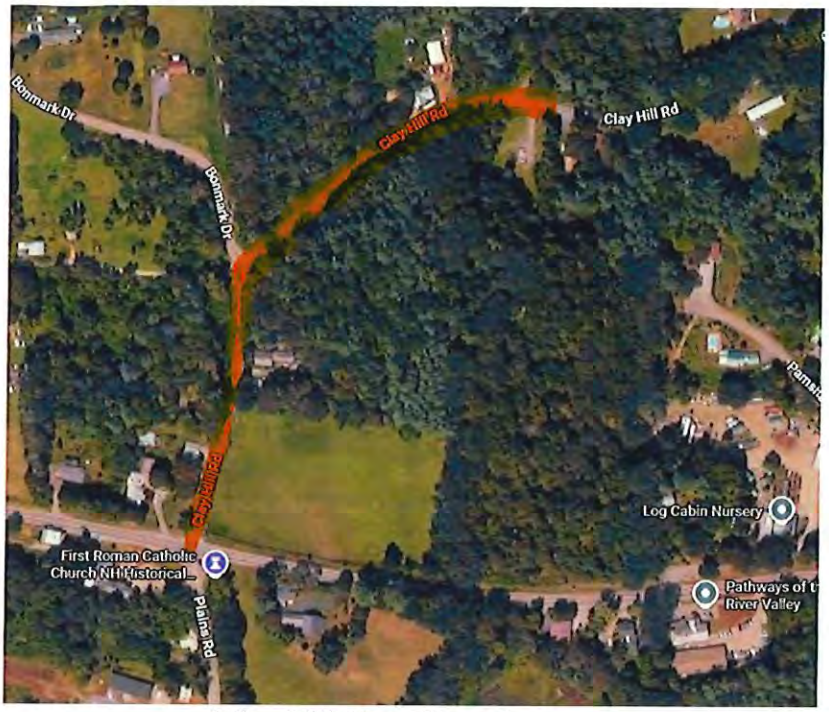

(Clay Hill Phase II area)

- Winter Street Sewer Replacement Project is currently out to bid. This is to replace the dated orangeburg sewer pipe from the 1940's that had several failures last winter.

- The Lower Belding Street Reconstruction Project is tentatively scheduled to begin the second week of September and will be a significant improvement to the area as it is a constant source of emergency utility calls over the last few years. This project will encompass water line and service upgrades, drainage upgrades, sewer upgrades, road and sidewalk improvements/replacements.

Staffing

Currently there is one truck driver position that has just opened internally. Once the position is filled the departments will be at full staff.

Respectfully submitted,

Alex Gleeson
Director, Department of Public Works

CITY OF CLAREMONT

Finance Office
58 Opera House Square
Claremont, New Hampshire 03743
Ph: (603) 542-7002 Fax: (603) 542-7014
Email: pbrown@claremontnh.com
www.claremontnh.com

FINANCE
AUGUST 2026 MONTHLY REPORT
09/4/2026

Honorable Mayor and Council Members,

We have begun the new fiscal year. Reports as of August 31, 2026, are attached. Budgets have been charged their entire health insurance amounts, resulting in departments being ahead in their spending.

Final reports for FY26 are not available as the FY25 Audit Entries have not yet been entered and we have some year-end work remaining. That said, we have ended FY26 within budgeted amounts for expenditures and higher than budgeted for revenues.

The Finance Office has completed the process of adding a donation payment option within miscellaneous payments so people can make donations online.

Department Highlights:

- FY26 Year End – working to close out FY26
- FY27 budget – budget adopted, posted and being spent. State reporting completed.

Data and Statistics:

Current Budget Status –

- General Fund – 21.8%
- TIF Fund – 72.1%
- Water Fund – 23.1%
- Sewer Fund – 16.5%

Staffing:

- Finance Director Recruitment – New Finance Director is expected to start in the next few weeks.
- Part-Time Help – A municipal finance person to work with the Finance Department two days a week until the new Finance Director has started and is learning the system. He will be available as a resource for the new Director as necessary.

Current Projects:

- FY26 Year-End Work
- FY25 Audit Wrap-Up
- FY26-27 State Reporting
- Procurement Policy

Paul J. Brown
Paul J Brown, Financial Consultant

REVENUE AND EXPENDITURE REPORT FOR CITY OF CLAREMONT

Balance As of 08/31/2026

GL Number	Description	26-27 Amended Budget	YTD Balance 08/31/2026 Normal	YTD Balance 08/31/2026 (Abnormal)	Activity For 08/31/2026 Increase	Activity For 08/31/2026 (Decrease)	Available Balance 08/31/2026 Normal	Available Balance 08/31/2026 (Abnormal)	% Bdgt Used
Fund: 001	**GENERAL FUND**								
Account Category: Revenues									
000	GENERAL	5,516,046.00		765,208.58		359,516.72	4,750,837.42		13.87
413	ELECTIONS	0.00		528.50		0.00		(528.50)	100.00
415	MUNICIPAL COMPLEX	0.00		1,693.50		0.00		(1,693.50)	100.00
416	PLANNING & DEVELOPMENT	180,000.00		53,397.60		28,966.75	126,602.40		29.67
417	GENERAL SERVICES	36,500.00		0.00		0.00	36,500.00		0.00
418	IT - INFORMATION TECHNOLOGY	182,750.00		32,459.44		32,459.44	150,290.56		17.76
420	COMMUNICATION 911	35,182.00		0.00		0.00	35,182.00		0.00
421	POLICE	146,808.00		22,820.00		5,090.94	123,988.00		15.54
422	FIRE	52,000.00		38,152.50		1,430.00	13,847.50		73.37
432	WELFARE	15,000.00		1,438.11		1,438.11	13,561.89		9.59
441	STREETS & ROADS	1,500.00		2,103.03		1,526.88		(603.03)	140.20
450	LIBRARY	2,000.00		386.50		37.50	1,613.50		19.33
471	CEMETERIES	126,000.00		14,850.00		7,300.00	111,150.00		11.79
472	AIRPORT OPERATIONS	126,583.00		22,418.66		11,860.50	104,164.34		17.71
481	PARKS & RECREATION	78,500.00		5,471.22		2,920.00	73,028.78		6.97
482	CSB COMMUNITY CENTER	635,000.00		86,698.27		39,596.41	548,301.73		13.65
Revenues		7,133,869.00		1,047,625.91		492,143.25	6,086,243.09		14.69
Fund 001 - GENERAL FUND:									
TOTAL REVENUES		7,133,869.00		1,047,625.91		492,143.25	6,086,243.09		14.69

REVENUE AND EXPENDITURE REPORT FOR CITY OF CLAREMONT

Balance As Of 08/31/2026

GL Number	Description	26-27 Amended Budget	YTD Balance 08/31/2026 Normal	YTD Balance 08/31/2026 (Abnormal)	Activity For 08/31/2026 Increase	Activity For 08/31/2026 (Decrease)	Available Balance 08/31/2026 Normal	Available Balance 08/31/2026 (Abnormal)	% Bdgt Used
Fund: 022 TIFD - DOWNTOWN									
Account Category: Revenues									
000 - GENERAL		772,946.00		(10,503.73)		(249.07)	783,449.73		1.36
Revenues		772,946.00		(10,503.73)		(249.07)	783,449.73		1.36
Fund 022 - TIFD - DOWNTOWN:									
TOTAL REVENUES		772,946.00		(10,503.73)		(249.07)	783,449.73		1.36

REVENUE AND EXPENDITURE REPORT FOR CITY OF CLAREMONT

Balance As Of 08/31/2026

GL Number	Description	26-27 Amended Budget	YTD Balance 08/31/2026 Normal	YTD Balance 08/31/2026 (Abnormal)	Activity For 08/31/2026 Increase	Activity For 08/31/2026 (Decrease)	Available Balance 08/31/2026 Normal	Available Balance 08/31/2026 (Abnormal)	% Bdgt Used
Fund: 090 WATER DEPARTMENT									
Account Category: Revenues									
000 - GENERAL		2,864,520.00		24,622.75		10,982.12	2,839,897.25		0.86
Revenues		2,864,520.00		24,622.75		10,982.12	2,839,897.25		0.86
Fund 090 - WATER DEPARTMENT:									
TOTAL REVENUES		2,864,520.00		24,622.75		10,982.12	2,839,897.25		0.86

REVENUE AND EXPENDITURE REPORT FOR CITY OF CLAREMONT

Balance As Of 08/31/2026

GL Number	Description	26-27 Amended Budget	YTD Balance 08/31/2026 Normal (Abnormal)	Activity For 08/31/2026 Increase (Decrease)	Available Balance 08/31/2026 Normal (Abnormal)	% Bdgt Used
Fund: 092 SEWER DEPARTMENT						
Account Category: Revenues						
000 - GENERAL		3,657,153.00	151,128.10	121,282.56	3,506,024.90	4.13
Revenues		3,657,153.00	151,128.10	121,282.56	3,506,024.90	4.13
Fund 092 - SEWER DEPARTMENT:						
TOTAL REVENUES		3,657,153.00	151,128.10	121,282.56	3,506,024.90	4.13
Report Totals:						
TOTAL REVENUES - ALL FUNDS		14,428,488.00	1,212,873.03	624,158.86	13,215,614.97	8.41

REVENUE AND EXPENDITURE REPORT FOR CITY OF CLAREMONT

Balance As of 08/31/2026

*NOTE: Available Balance / Pct Budget does not reflect amounts encumbered.

GL Number	Description	26-27 Amended Budget	YTD Balance 08/31/2026 Normal	YTD Balance 08/31/2026 (Abnormal)	Activity For 08/31/2026 Increase (Decrease)	Available Balance 08/31/2026 Normal	Available Balance 08/31/2026 (Abnormal)	% Bdgt Used
Fund: 001 GENERAL FUND								
Account Category: Expenditures								
000	GENERAL	0.00		0.00	0.00		(25,342.52)	0.00
411	EXECUTIVE/HR/COUNCIL	639,647.00		148,914.34	33,926.87		490,732.66	23.28
412	FINANCE/CENTRAL COLLECTIONS	831,921.00		251,304.05	40,446.49		580,507.00	30.21
413	ELECTIONS	21,280.00		153.14	150.18		21,126.86	0.72
414	ASSESSING	239,081.00		35,177.24	10,780.57		85,540.76	14.71
415	MUNICIPAL COMPLEX	619,310.00		58,281.40	18,363.80		560,473.24	9.41
416	PLANNING & DEVELOPMENT	1,080,625.00		322,743.98	49,001.97		757,734.90	29.87
417	GENERAL SERVICES	846,000.00		71,200.46	38,605.81		774,799.54	8.42
418	IT - INFORMATION TECHNOLOGY	832,012.08		363,847.14	219,985.18		443,881.00	43.73
420	COMMUNICATION 911	765,346.00		231,066.52	41,364.34		534,279.48	30.19
421	POLICE	3,773,140.00		871,846.64	204,464.44		2,901,293.36	23.11
422	FIRE	2,848,749.00		827,120.83	206,186.73		2,021,628.17	29.03
432	WELFARE	578,048.00		148,019.22	38,022.12		380,028.78	25.61
434	SANITATION	28,000.00		220.00	220.00		27,780.00	0.79
441	STREETS & ROADS	4,293,991.72		576,550.32	118,331.57		3,478,563.51	13.43
450	LIBRARY	449,240.00		95,312.88	20,329.51		353,927.12	21.22
461	DEBT SERVICE	856,111.00		160,662.55	0.00		695,448.45	18.77
471	CEMETERIES	311,788.00		91,068.60	16,178.77		220,719.40	29.21
472	AIRPORT OPERATIONS	126,583.00		1,629.48	580.69		124,953.52	1.29
481	PARKS & RECREATION	456,161.00		99,636.09	41,282.32		356,324.91	21.84
482	CSB COMMUNITY CENTER	1,132,332.00		150,496.81	57,493.23		981,835.19	13.29
485	OUTSIDE ORGANIZATIONS	64,000.00		30,000.00	30,000.00		34,000.00	46.88
Expenditures		20,793,365.80		4,535,251.69	1,185,714.59		15,800,235.33	21.81
Fund 001 - GENERAL FUND:								
TOTAL EXPENDITURES		20,793,365.80		4,535,251.69	1,185,714.59		15,800,235.33	21.81

REVENUE AND EXPENDITURE REPORT FOR CITY OF CLAREMONT

Balance As Of 08/31/2026

*NOTE: Available Balance / Pct Budget does not reflect amounts encumbered.

GL Number	Description	26-27 Amended Budget	Normal	YTD Balance 08/31/2026 (Abnormal)	Activity For 08/31/2026 Increase (Decrease)	Normal	Available Balance 08/31/2026 (Abnormal)	% Bdgt Used
Fund: 022 TIFD - DOWNTOWN								
Account Category: Expenditures								
000 - GENERAL		65,000.00		0.00	0.00		65,000.00	0.00
610 - DEBT SERVICE		587,550.00		544,300.00	0.00		43,250.00	92.64
620 - SAWTOOTH		103,250.00		13,084.72	1,402.33		83,155.84	12.67
630 - HUD GRANT		17,146.00		0.00	0.00		17,146.00	0.00
Expenditures		772,946.00		557,384.72	1,402.33		208,551.84	72.11
Fund 022 - TIFD - DOWNTOWN:								
TOTAL EXPENDITURES		772,946.00		557,384.72	1,402.33		208,551.84	72.11

REVENUE AND EXPENDITURE REPORT FOR CITY OF CLAREMONT

Balance As Of 08/31/2026

*NOTE: Available Balance / Pct Budget does not reflect amounts encumbered.

GL Number	Description	26-27 Amended Budget	YTD Balance 08/31/2026 Normal	YTD Balance 08/31/2026 (Abnormal)	Activity For 08/31/2026 Increase (Decrease)	Available Balance 08/31/2026 Normal	Available Balance 08/31/2026 (Abnormal)	% Bdgt Used
Fund: 090 WATER DEPARTMENT								
Account Category: Expenditures								
000 - GENERAL		0.00		54,186.43	0.00		(54,186.43)	100.00
490 - WATER		2,887,524.22		611,272.19	91,565.28		1,812,775.44	21.17
Expenditures		2,887,524.22		665,458.62	91,565.28		1,758,589.01	23.05
Fund 090 - WATER DEPARTMENT:								
TOTAL EXPENDITURES		2,887,524.22		665,458.62	91,565.28		1,758,589.01	23.05

REVENUE AND EXPENDITURE REPORT FOR CITY OF CLAREMONT

Balance As Of 08/31/2026

*NOTE: Available Balance / Pct Budget does not reflect amounts encumbered.

GL Number	Description	26-27 Amended Budget	YTD Balance 08/31/2026 Normal	YTD Balance 08/31/2026 (Abnormal)	Activity For 08/31/2026 Increase (Decrease)	Available Balance 08/31/2026 Normal	Available Balance 08/31/2026 (Abnormal)	% Bdgt Used
Fund: 092 SEWER DEPARTMENT								
Account Category: Expenditures								
492 - SEWER		3,643,520.00		595,711.54	139,881.28		2,321,874.27	16.35
Expenditures		3,643,520.00		595,711.54	139,881.28		2,321,874.27	16.35
Fund 092 - SEWER DEPARTMENT:								
TOTAL EXPENDITURES		3,643,520.00		595,711.54	139,881.28		2,321,874.27	16.35
Report Totals:								
TOTAL EXPENDITURES - ALL FUNDS		28,097,356.02		6,353,806.57	1,418,563.48		20,089,250.45	22.61

CITY OF CLAREMONT

City Manager's Office
58 Opera House Square
Claremont, New Hampshire 03743
Ph: (603) 542-7002 Fax: (603) 542-7014
Email: citymanager@claremontnh.com
www.claremontnh.com

DEPARTMENT-FIRE
MONTHLY REPORT
DATE- Month of August

I would like to begin this month's report by remembering one of our faithfully departed members, Chief Victor Bergeron.

Chief Bergeron served the Claremont community for more than 23 years as a member of the Fire Department, ultimately retiring as an Assistant Chief. His commitment to our community extended well beyond the fire service. Chief Bergeron was heavily involved in city government, serving on the School Board and City Council. In 2005, he was honored as Claremont's Citizen of the Year, recognizing his many years of service and dedication to our community.

On behalf of the entire Claremont Fire Department, I extend our deepest condolences to Chief Bergeron's family. His service to Claremont and the Fire Department will not be forgotten.

Department Highlights:

During the month of August, the Claremont Fire Department responded to 130 calls for service. This included providing mutual aid to Newport, NH, for two separate brush fires.

We have exhausted the remaining funds from our FEMA Fire Prevention & Safety Grant. As a result, we will once again be out canvassing neighborhoods as part of our community risk reduction efforts. Our goal is simple: to identify homes in need and provide free smoke detectors to residents who may not otherwise have access to them.

August was another busy month for training. The department hosted a meaningful training program focused on LP Gas operations and emergencies. Crews spent half a day in the classroom before traveling to the Plains Propane facility, where we were able to familiarize ourselves with their operation, including the loading and unloading of train cars.

CITY OF CLAREMONT

City Manager's Office
58 Opera House Square
Claremont, New Hampshire 03743
Ph: (603) 542-7002 Fax: (603) 542-7014
Email: citymanager@claremontnh.com
www.claremontnh.com

August was also a personally impactful month for me professionally. I was officially sworn in to represent New Hampshire on the New England Association of Fire Chiefs Division. Each New England state selects one chief, chosen by the chiefs within that state, to represent their state at the regional level. I am honored to have been selected and look forward to representing New Hampshire and Claremont in this role.

I was also able to participate in several professional development classes during the month, including training focused on advancements in artificial intelligence and mental health awareness.

Staffing:

Our newest members have officially started with the department. Michaela Beveliqua has been assigned to the Hose Company, while Tyler Sprague has been assigned to Group II. I want to wish both of them the best of luck as they begin this new chapter with the Claremont Fire Department. We are excited to have them on board and look forward to watching them grow within the organization.

The Police Chief and I also assisted the City with the interview process for candidates for both the Parks and Recreation Director and Finance Director positions. I appreciate the opportunity to assist the City in these important hiring processes and to work with other department heads toward the continued success of our organization.

Current Projects:

We are also working with the Parks and Recreation Department to host a 9/11 remembrance event at the Visitors Center. This year marks the 25th anniversary of September 11, 2001, and we feel it is important to take time as a community to remember those who lost their lives and those who continue to be impacted by that day. Those wishing to attend can plan for an 8:30 AM start time.

We are also planning another live fire training exercise at our training facility in early September. These hands-on training opportunities remain an important part of maintaining our readiness and ensuring our personnel are prepared when called upon.

CITY OF CLAREMONT

City Manager's Office
58 Opera House Square
Claremont, New Hampshire 03743
Ph: (603) 542-7002 Fax: (603) 542-7014
Email: citymanager@claremontnh.com
www.claremontnh.com

Partnerships:

Through my involvement with the Chiefs Association, I have also been able to request reimbursement funding for the equipment purchased for these two new members. We are hopeful that we will be successful in securing more than $8,000 in reimbursement funds for their fire gear. Any funding we can bring back to the city helps reduce the financial impact of bringing new members into the department.

As always, I want to thank the members of the Claremont Fire Department for their continued dedication and commitment to our community. I also want to thank the City Council, City administration, and the residents of Claremont for their continued support of our department.

There is a lot that happens behind the scenes at our fire department, from training and recruitment to community outreach and regional cooperation. August was a busy month, and I am proud of the work our members continue to do each day to serve the citizens of Claremont.

Thank you for your continued support.

James Chamberlain
Chief of Department

CITY OF CLAREMONT

City Manager's Office
58 Opera House Square
Claremont, New Hampshire 03743
Ph: (603) 542-7002 Fax: (603) 542-7014
Email: citymanager@claremontnh.com
www.claremontnh.com

DEPARTMENT: Fiske Free Library
MONTHLY REPORT
DATE: September 2, 2026

Department Highlights:

Our Summer Reading Program encourages children, teens, and families to keep reading, discover new books, and have fun at the library all summer long. Each year features a variety of reading challenges, story times, activities, special guests, and family-friendly programs designed to inspire a lifelong love of reading and learning.

- Summer Reading Program: "*No Rules, Just Read*" our summer reading program ended with a nicely attended program created by our own Mary Carter – *Debunking Bunker Hill.* A mix of parents and children numbering 30 were in attendance for the program.
- The summer reading program garnered about 155 readers.

The Fiske Free Library's summer reading program, "No Rules, Just Read," came to a successful close this summer with approximately 155 readers participating. The program offered children and families a variety of opportunities to read, learn, and engage with the library throughout the summer, including popular "Read to a Dog" sessions and regular Story Time programs.

The summer program concluded with a well-attended presentation, *Debunking Bunker Hill*, created and presented by our own Mary Carter. The program drew approximately 30 attendees, including a mix of parents and children, and provided an engaging opportunity for families to learn together.

Overall, the summer reading program was a positive and well-supported initiative that encouraged reading, brought families into the library, and provided meaningful educational and community programming throughout the summer.

Data and Statistics:

- Patrons: 8,741 patrons
  - 17 new patrons added
- Circulation:
  - 2263 checked out
  - 2297 checked-in
  - 374 renewed
  - 168 in-house uses
- Digital Circulation: 878

- Items Added and Deleted:

CITY OF CLAREMONT

City Manager's Office
58 Opera House Square
Claremont, New Hampshire 03743
Ph: (603) 542-7002 Fax: (603) 542-7014
Email: citymanager@claremontnh.com
www.claremontnh.com

  - Added: 196
  - Deleted: 53
- Public Access Computers Usage: 260

The library saw steady patron activity during the reporting period. Patrons checked out 2,263 items, with 2,297 items returned and 374 renewals processed. In addition, there were 168 in-house uses of library materials and services. Digital circulation remained strong, with 878 digital items circulated.

The collection continued to grow and be actively maintained, with 196 new items added and 53 items deleted as part of ongoing collection development and weeding efforts. Public technology services also remained an important resource, with 260 uses of the library's public access computers recorded.

Overall, these figures demonstrate continued use of the library's physical collections, digital resources, technology, and in-house services by the community.

Staffing:

- New Library Director: Jim Allen has been hired as the Library Director at Fiske Free. His first day was August 24, 2026.

Current Projects:

- Roof Project

Partnerships:

- FFL Library Director has been contacted by the Claremont Garden Club regarding Working on the garden beds on the property.

Jim Allen, Library Director

CLAREMONT
PARKS & RECREATION DEPT.

Parks & Recreation Department
Shaun Laplante, Asst Director of Parks & Recreation
152 South Street
Claremont, New Hampshire 03743
Ph: (603) 542-7019
Email: ccprograms@claremontnh.com
www.claremontparks.com

August 2026 Parks & Recreation Department Report
City of Claremont, New Hampshire

Department Highlights:

National Night Out Claremont Parks & Recreation partnered with the Claremont Police Department and Greater Claremont Chamber of Commerce to host National Night Out on Pleasant Street. The free community event brought residents together with local law enforcement, first responders, businesses, and community organizations for an evening of activities, food, entertainment, and family fun. We would like to thank all of the participating organizations, vendors, volunteers, and community members who helped make this year's National Night Out another successful event.

All Out Trail Run We successfully hosted the All Out Trail Run at Moody Park as part of the Western New Hampshire Trail Running Series. This year's event welcomed 87 runners who took on approximately five miles of Moody Park's challenging trail network on a beautiful race day. We would like to thank our sponsors, Claremont Savings Bank, North Country Smokehouse, Ink Factory, and Omer & Bob's, for helping make the event possible, as well as our volunteers and staff who worked to prepare the course. Congratulations to all of our participants and race winners, who once again took home the event's signature bacon prizes!

American Band Concerts The American Band summer concert series has officially concluded another successful season. Throughout the summer, the series provided the community with an opportunity to enjoy live music and entertainment in a welcoming outdoor setting. Parks & Recreation would like to thank all of the performers, sponsors, staff, and community members who supported the series and helped make this year's concerts a success. We look forward to bringing the program back again next summer.

Kids Summer Adventure Camp Claremont Parks & Recreation's Kids Summer Adventure Camp has wrapped up another successful summer of activities, field trips, and outdoor adventures. Participants had the opportunity to visit destinations including Polar Caves and Clark's Trading Post while enjoying a variety of recreational and social experiences throughout the program. We would like to thank our staff, families, and participants for helping make this year's camp a fun and memorable experience.

Junior Mtn. Biking Club Claremont Parks & Recreation's Junior Mountain Biking Club provided local youth with the opportunity to develop their riding skills while exploring the trail network at Moody Park. In partnership with instructors from The Wheel House, participants learned bike handling, trail riding, safety, and proper trail etiquette in a fun and supportive environment. We would like to thank The Wheel House and our participating families for helping make this summer program a success.

CLAREMONT
PARKS & RECREATION DEPT.

Parks & Recreation Department
Shaun Laplante, Asst Director of Parks & Recreation
152 South Street
Claremont, New Hampshire 03743
Ph: (603) 542-7019
Email: ccprograms@claremontnh.com
www.claremontparks.com

Coed Softball Playoffs The Parks & Recreation Coed Softball League recently concluded its season with the A and B Division playoffs. Congratulations to Outlaws 2.0, who captured the A Division Championship, and Mood Swings, who were crowned the B Division Champions. We would like to thank all of the teams, players, umpires, and staff who helped make this year's season a success and congratulate both championship teams on a great season.

Movie Night On The Green Claremont Parks & Recreation wrapped up the summer Movie Night on the Green series with *Super Mario Galaxy*, welcoming more than 75 community members for a fun evening under the stars. We would like to thank the Claremont Kiwanis Club for sponsoring the event and helping us provide another free, family-friendly activity for the community. The strong turnout was a great way to conclude another successful summer movie series.

CYSA Championships CYSA Summer Soccer concluded another successful season with championship games at Monadnock Park. The day began with a 2nd–3rd Grade Jamboree, providing our younger athletes with an opportunity to celebrate their season before the championship games. Congratulations to Chelsea, who captured the 4th–5th Grade Division Championship, and Portugal, who were crowned the 6th–8th Grade Division Champions. We would like to thank all of the players, coaches, referees, volunteers, and families who helped make this year's summer soccer season a success.

Flume Gorge Trip Claremont Parks & Recreation hosted a trip to Flume Gorge, providing participants with an opportunity to explore one of New Hampshire's most scenic natural attractions. Attendees enjoyed a beautiful day of hiking and sightseeing while experiencing the waterfalls, covered bridges, and natural features along the gorge. The trip was another great opportunity to provide community members with affordable outdoor recreation and adventure beyond Claremont.

Mini Cards Youth Football The Mini Cardinals Youth Football season is underway, with our young athletes returning to the field for another exciting fall season. The program continues to provide opportunities through both flag and tackle football, focusing on skill development, teamwork, sportsmanship, and preparing athletes for future levels of play. We would like to thank our volunteer coaches, families, and supporters for their continued commitment to providing a positive football experience for Claremont's youth.

Youth Field Hockey Claremont Parks & Recreation's Youth Field Hockey program is underway for the fall season, providing young athletes with an opportunity to learn and develop their skills while building teamwork and sportsmanship. Participants are preparing for practices and games against surrounding communities throughout the season. We would like to thank our volunteer coaches and families for their continued support and commitment to growing youth field hockey in Claremont.

CLAREMONT
PARKS & RECREATION DEPT.

Parks & Recreation Department
Shaun Laplante, Asst Director of Parks & Recreation
152 South Street
Claremont, New Hampshire 03743
Ph: (603) 542-7019
Email: cscprograms@claremontnh.com
www.claremontparks.com

CSBCC Updates

- We are currently looking into replacing the Munters Unit (pool dehumidifier) as the unit is outdated and the company has been difficult to get a hold of for service calls.
- The wiring has been installed for 2 new cameras to be installed in the gym. We are hoping they can be installed in time for the kids getting back in school.
- We have streamlined our scholarship process so that we can serve our community more efficiently.
- We have replaced all the lights in the Basketball Court Gym.
- The UV System for the pool was serviced after the unit shutdown unexpectedly. It is back up and running.
- During a storm the VLT Unit for the Lap Pool shorted. We called our friends from Edgar May to ask how to reset it to get it back up and running. It is now operational.
- We continue to address wear and tear of the CSBCC facility with small projects as time allows. Our part-time janitor, Dan Benware, has been painting walls, fixing lights and addressing outdoor cleanup.

Parks Updates

With the absence of a Parks Superintendent position, we have been maintaining park spaces while trying to focus on projects as time allows. We are looking forward to bringing on new personnel and getting them up to speed on our needs in and around the community parks.

Several projects that are completed and/or moving forward are as follows:

- TD Plumbing inspected the irrigation system on the track game field before the Fall High School season began.
- We cleaned up Moody Park trails and tree lines in preparation of the All Out Trail Run.

Upcoming Events		
Date	**Event**	**Location(s)**
Fri. September 11th	*9/11 Remembrance*	Visitors Center
Sun. September 13th	*Elks Soccer Shootout*	Monadnock Park
Mon. September 14th	*Rec Commission Meeting*	CSBCC (Room B)
Sat. September 19th	*Brewfest*	Visitors Center Green
Sat. October 3rd	*Fall Festival Chili Cook Off*	Visitors Center Green
Fri. Sat. & Sun. October 16th, 17th, & 18th	*Eastern State Cup Enduro Mtn. Bike Race*	Arrowhead & Moody Park
Sat. October 24th	*Spooky Ride*	Moody Park
Sat. October 31st	*Hallowesta*	Pleasant Street

CLAREMONT
PARKS & RECREATION DEPT.

Parks & Recreation Department
Shaun Laplante, Asst Director of Parks & Recreation
152 South Street
Claremont, New Hampshire 03743
Ph: (603) 542-7019
Email: ccprograms@claremontnh.com
www.claremontparks.com

Key Performance Indicators (KPI's) - Data & Statistics:

Active CSBCC Memberships
(+ or – from previous month)

Adult (Paid in Full): 91 (-5)
Adult (MTM Agreement): 146 (-8)
Adult (MTM No Agreement): 17 (-2)

Youth (Paid in Full): 31 (0)
Youth (MTM Agreement): 36 (-4)
Youth (MTM No Agreement): 12 (-1)

College (Paid in Full): 10 (0)
College (MTM Agreement): 8 (-2)
College (MTM No Agreement): 5 (-5)

Family (Paid in Full): 117 (+2)
Family (MTM Agreement): 118 (+1)
Family (MTM No Agreement): 12 (-3)

Senior (Paid in Full): 338 (0)
Senior (MTM Agreement): 82 (+5)
Senior (MTM No Agreement): 67 (-6)

Total Active CSBCC Memberships: 1,090 (-27)

Member Entries/Check-Ins:
4,626 (-347)
Guest Pass Entries/Check-Ins:
370 (-156)
Total Net Monthly Revenue
$49,468.66 (-$1,144.25)

**Note: All financial reports are run through Xplor and only depict revenues being processed through this software.*

CLAREMONT
PARKS & RECREATION DEPT.

Parks & Recreation Department
Shaun Laplante, Asst Director of Parks & Recreation
152 South Street
Claremont, New Hampshire 03743
Ph: (603) 542-7019
Email: cccprograms@claremontnh.com
www.claremontparks.com

Staffing:

Front Desk We are accepting applications on an ongoing basis as this is a heavy turnover position due to high school, college and senior employees.

Lifeguard We are accepting applications on an ongoing basis for this position. We are always looking for certified lifeguards. Currently, the department has a staffing need for lifeguards during early morning and mid-day shifts. We have a scheduled lifeguard certification course the weekend of May 8th at the CSBCC with 5 recertification and 4 new lifeguards.

Fitness Instructor/Personal Trainer We are accepting applications on an ongoing basis for these positions. We are looking for multi-faceted instructors/personal trainers who want to work with a large diversity of people.

Superintendent of Parks and Facility Operations After several months of ongoing recruitment efforts, staff is working with HR and the City Manager on a plan that restructures the department. This approach is intended to broaden the applicant pool and increase the number of qualified candidates available for consideration.

CLAREMONT
PARKS & RECREATION DEPT.

Parks & Recreation Department
Shaun Laplante, Asst Director of Parks & Recreation
152 South Street
Claremont, New Hampshire 03743
Ph: (603) 542-7019
Email: cccprograms@claremontnh.com
www.claremontparks.com

Current Projects:

Rail Trail Extension Resilience Planning and Design, LLC is nearing completion of the feasibility phase of this project, focusing on overall feasibility and permitting, as well as developing visual renderings to illustrate the concept. After revisiting the third component, community outreach, we have decided to pause that effort until the project reaches a more mature stage, instead, the focus has been allotted costs of the project to help seek grant funding in the future. This will allow for more informed and productive public engagement. The proposed trail would connect the existing rail trail near the trestle bridge to Wall Street, strengthening access between downtown businesses and our recreational trail network. This effort remains a preliminary study, fully funded through the Recreation Roundtable Grant accepted by City Council in August 2024, and is not an implementation project at this time.

AARP Community Challenge Grant Award The City Council has formally accepted the $15,000 AARP Community Challenge Grant for the installation of a new shade pavilion at Monadnock Park. Claremont Parks & Recreation is also pleased to report that the Claremont Kiwanis Club has pledged the remaining funding needed to complete the project, allowing us to move forward with the project fully funded. Staff are currently awaiting the engineered plans, which will allow us to finalize and adjust the RFP before sending the project out to bid. We are hopeful that construction can be completed by the end of October, providing a new shaded gathering space for families and visitors at Monadnock Park.

LWCF Project at Veterans Park City Council has formally reviewed the potential options for utilizing the remaining $187,465.00 in Land and Water Conservation Fund (LWCF) funding at Veterans Park and has directed staff to further explore three potential projects: installation of lighting for the new pickleball courts, construction of a permanent restroom facility, and upgrading the existing lighting at the softball field. Parks & Recreation will now begin evaluating the feasibility, scope, and estimated costs associated with each option while continuing to work closely with the New Hampshire State LWCF Program to ensure compliance with funding requirements and determine the necessary process for a formal project scope change. Additional information will be brought back to Council as these options are further developed.

CLAREMONT
PARKS & RECREATION DEPT.

Parks & Recreation Department
Shaun Laplante, Asst Director of Parks & Recreation
152 South Street
Claremont, New Hampshire 03743
Ph: (603) 542-7019
Email: ccprograms@claremontnh.com
www.claremontparks.com

CSBCC Fitness Equipment Staff has been reviewing the current condition and long-term needs of the CSBCC Fitness Center equipment and has collected detailed usage data and lifespan statistics to guide future replacement planning. In addition, we plan to create and administer a survey to members regarding fitness equipment, with the goal of gathering and organizing user feedback to help guide the next wave of equipment investments at the CSBCC. With a non-capital reserve fund established at the time the Community Center opened, funding has been set aside specifically for this purpose with no local tax rate implications. The proposed approach focuses on replacing equipment that is currently beyond its warranty period with comparable, updated models to ensure reliability and user safety.

Monadnock Park Tennis Court Removal We are currently working with the Department of Public Works to explore the removal of the former tennis courts at Monadnock Park and the conversion of the area into much-needed green space to support recreational programming and community use. Preliminary plans call for retaining the section of chain-link fencing closest to the roadway to provide a protective barrier from vehicle traffic and help deter vandalism. Staff will also be coordinating with Dig Safe and utility providers to identify and address underground electrical infrastructure associated with the former court lighting system. Pending final planning and coordination efforts, the project is anticipated to begin in the fall and will provide additional flexible space to accommodate the growing demand for Parks & Recreation programs and special events.

CSBCC Roof Repair Claremont Parks & Recreation continues to move forward with the Claremont Savings Bank Community Center roof repair project. Bill Willette is currently working to obtain additional quotes for the necessary repairs so staff can better evaluate the scope of work, anticipated costs, and the best path forward for the project. As these quotes and additional information are received, we expect to have a more detailed update on the project and next steps in the near future.

CLAREMONT
PARKS & RECREATION DEPT.

Parks & Recreation Department
Shaun Laplante, Asst Director of Parks & Recreation
152 South Street
Claremont, New Hampshire 03743
Ph: (603) 542-7019
Email: ccprograms@claremontnh.com
www.claremontparks.com

New Partnerships:

Claremont Kiwanis Club Claremont Parks & Recreation would like to recognize and thank the Claremont Kiwanis Club for their continued partnership and generous support of our community programs and projects. Kiwanis recently sponsored our final Movie Night on the Green of the summer, helping us provide another free, family-friendly event for the community. In addition, the Club has generously pledged the remaining funding needed to complete the new shade pavilion project at Monadnock Park, supplementing the $15,000 AARP Community Challenge Grant. Their commitment to this project will help bring a valuable new amenity to Monadnock Park, and we greatly appreciate Kiwanis' continued investment in Claremont's youth, families, and recreational opportunities.

The Wheelhouse Claremont Parks & Recreation would like to recognize and thank The Wheel House for partnering with us to offer the Junior Mountain Biking Club this summer. Their instructors provided local youth with an opportunity to develop their riding skills, learn proper trail etiquette and safety, and explore the trail network at Moody Park. A special thank you goes to Rob Walker for his enthusiasm and continued commitment to expanding mountain biking opportunities in Claremont. Rob has been actively developing ideas for the future of our local trail systems, including opportunities to enhance and expand trails at both Arrowhead Recreation Area and Moody Park. We look forward to continuing this partnership and working together to improve Claremont's trail network and create additional outdoor recreation opportunities for residents and visitors.

CPD & Chamber of Commerce Claremont Parks & Recreation would like to recognize and thank the Claremont Police Department and the Greater Claremont Chamber of Commerce for once again partnering with us to host another successful National Night Out. A special thank you goes to Justin Laffin of the Claremont Police Department and Elyse Crossman of the Greater Claremont Chamber of Commerce for their leadership, coordination, and continued commitment to making this event possible. This partnership continues to bring together residents, law enforcement, first responders, local businesses, and community organizations for a positive evening focused on community engagement and connection. We greatly appreciate their continued collaboration and look forward to building upon this partnership for future National Night Out events.

CLAREMONT
PARKS & RECREATION DEPT.

Parks & Recreation Department
Shaun Laplante, Asst Director of Parks & Recreation
152 South Street
Claremont, New Hampshire 03743
Ph: (603) 542-7019
Email: cccprograms@claremontnh.com
www.claremontparks.com

Heather Williams Claremont Parks & Recreation would like to recognize and sincerely thank Heather Williams for her many years of dedicated service as the League Secretary for our Adult Coed Softball League. Heather continues to play an important role in keeping the league organized and running smoothly throughout the season. Most recently, she dedicated two consecutive weekends to keeping the official scorebook for both the A and B Division Playoffs, while also ensuring teams were kept up to date on game results and upcoming matchups so the tournament schedules could continue moving efficiently. Her reliability, organization, and willingness to give her time year after year are greatly appreciated, and we thank Heather for everything she continues to do for the league and our Parks & Recreation programs.

CYSA Board Claremont Parks & Recreation would like to recognize and sincerely thank the Claremont Youth Soccer Association (CYSA) Board for their tremendous work and dedication throughout the Summer Soccer season. The Board did an outstanding job coordinating another successful season and capped off the summer with a great Championship Weekend and 2nd–3rd Grade Jamboree in mid-August. Their organization, communication, and commitment to creating a positive experience for our young athletes and families are greatly appreciated. The CYSA Board is an amazing group to work with, and they have already turned their attention toward preparing for another successful Fall Soccer season. We are grateful for their continued partnership and everything they do to support youth soccer in Claremont.

Respectfully submitted by,

Shaun Laplante,

Assistant Director of Parks & Recreation

CITY OF
CLAREMONT

14 North Street
Claremont, NH 03743

September 2026- City Council Monthly Report

From: Planning & Development Department - Director, Gina Gavan
Date Submitted: September 2nd, 2026

DEPARTMENT HIGHLIGHTS

- **Open Position –** City Planner open role is posted on the website. We will be working with Austin during a transition period, and we wish him great success in his endeavors!

- **Planter Boxes –** Claremont Garden Club will be making a site visit to Pleasant St. and meeting with the City of Claremont on ways to update and maintain the planters.

- **Downtown Stakeholder mtg –** This fall (Nov) we will be organizing a downtown stakeholder meeting to discuss key projects and engage the business community.

- **Shoot Date, Marketing Video for Claremont - October 16** – We'll be shooting the Claremont segments on October 16, 2026, and finalizing the script messaging, and the visuals featuring Claremont, along with a shoot list for interviews. The run of show, and details will be shared with Council, and the Directors in the coming weeks.

NEW BUSINESS & ECONOMIC DEVELOPMENT HIGHLIGHTS

- **Opportunity Zone 2.0** – Claremont recently submitted an application to the state for the newly bolstered federal tax relief program. Claremont has 3 census tracts eligible. The state has a total of 53 eligible tracts, and of these 53 census tracts; 25 new tracts can be nominated to the U.S. Treasury for designation. The federal determination is anticipated to be final in January 2027.

- **ERZ Zones** –The state is sending a letter regarding the zones in Claremont that are up for renewal. Every 5 years the state works with local jurisdictions on identified zones. This is a state program where the applicants apply directly to the state for the available funds. It's a great stackable economic development tool for businesses that qualify. The incentive allows a qualifying company that meets certain criteria to be eligible for tax credits up to $40,000 a year, for a maximum of six (6) years.

- **Small Business Center –** Next steps, grant requirements and an updated timeline are needed.

- **Business Visits/Retention** -From the Economic Development/Business Development Team:
  - Davis Frame - *Dylan*
  - Style House Salon - *Dylan*
  - Studio 41 - *Dylan*
  - Claremont Savings Bank - *Dylan & Gina*
  - Canam Bridges – *Dylan & Gina*
  - Lavalley Building Supply – *Dylan*

- **Business Attraction/Relocation** – Dylan has been working with several current and aspiring business owners to locate a suitable location for their expansion, or first commercial property. He's looking at site selection needs, and providing them with resources, and contact information for further action.

PROJECT PIPELINE

Fit Up & Construction Plans

- Valley Regional Hospital- New Building (224 Elm Street) Certificate of Occupancy Issued
- 32 Lafayette Street- Self Storage Business
- Aroma Joes – 45 Washington Street
- Reed Optical – 11 Main Street
- 17 Water Street – New residential units
- 65 Pleasant Street – New residential units
- 356 Washington Street – New Business
- 492 Washington Street – Multi-family residential development
- West Central Behavioral Health – New location
- Kearsarge Claremont Solar LLC – Large solar array project
- 44-50 Central Street – Remodel residential units

PERMITS, CODE ENFORCEMENT & INSPECTIONS

Building Inspections August 2026: 44
Building Inspections 2026: 232

Building Permits August 2026: 51
Building Permits 2026 (calendar year): 422

Additional inspections:

- Rental Assistance Inspections:0
- Property Maintenance Inspections: 22
- Food Service Inspections:16
- Health Complaint Inspection:1

Code Enforcement Report –July 2026

- New Complaints & PM this month –22
- Complaints & PM abated this month-1
- Complaints & PM active this year -100
- Complaints & PM year to date – 100
- Complaints & PM abated year to date -7

New Formal Enforcement Actions (Violation Letters) –22

- 24 Royce Street
- 19 Maria Street
- 195 Mulberry Street
- 171 Maple Avenue
- 32 Myrtle Street
- 20 Briggs Street
- 80 West Terrace Street

- 16 Pine Avenue
- 40 Wall Street
- 47 East Street
- 10 Charles Street
- 17 Old Newport Road
- 195 Mulberry Street
- 125 Charlestown Road
- 54 Durham Avenue
- 104 Summer Street
- 263 North Street
- 24 Bellic Street
- 18 Lefebvre Ave
- 119 Main Street
- 150-154 Washington Street
- 264 Chestnut Street

***Court Enforcement –3**

- 143 Sugar River Dr. – Starting court process
- 36 West Pleasant St. – Starting court process
- 13 Edgewood Street- Court process

**City Actions on private properties this month –0*

Code Enforcement Complaints –August 2026

NEW COMPLAINTS	CC/PM	ABATED (=Year of Complaint)	CC/PM
24 Royce Street	CC/PM		
19 Maria Street	CC/PM		
195 Mulberry Street	CC/PM		
171 Maple Avenue	CC/PM		
32 Myrtle Street	CC/PM		
20 Briggs Street	CC/PM		
80 West Terrace Street	CC/PM		
16 Pine Avenue	CC/PM		
40 Wall Street	CC/PM		
47 East Street	CC/PM		
10 Charles Street	CC/PM		

17 Old Newport Road	CC/PM		
195 Mulberry Street	CC/PM		
125 Charlestown Road	CC/PM		
54 Durham Avenue	CC/PM		
104 Summer Street	CC/PM		
263 North Street	CC/PM		
24 Bellic Street	CC/PM		
18 Lefebvre Ave	CC/PM		
119 Main Street	CC/PM		
150-154 Washington Street	CC/PM		
264 Chestnut Street	CC/PM		
Total New Complaints	**22**	**Total Abated**	

PLANNING, RFP'S & GRANT UPDATES

Upper Valley Lake Sunapee Regional Planning Commission

- Requested planning maps on open space and trail connectivity for future master planning updates.

City Website Project

- RFP has been posted.
- Last day for proposal submission 9/4.
- Public bid opening 9/8 @1pm
- Project manager is compiling a total cost of ownership report for existing site.

56 Opera House Square – Claremont Creative Center - CDA

- Work awarded to Blanc & Bailey Construction.
- Rubber membrane was fully installed on Dec 18, 2025.
- Completion is anticipated, September 2026. Engineering review to be completed.

TAP Grant Broad Street/Rail Trail

- Plans completed by BETA and submitted to NHDOT for approval.
- Planning & Development and Public Works staff are awaiting further updates on the approval process from NHDOT.

EPA Grant

- Remedial action plan submitted to NHDES for formal approval.
- Weston & Sampson has submitted to NHDES the remedial plan for smokestack.
- Next, the RFP will be posted to remove the Sullivan Smokestack in the coming months.

BOARDS & COMMITTEES

Conservation Commission - August 20, 2026

- Discussion and Conclusions on Cat Hole Land
- Discussion on Steves Brook Easement- Upper Valley Trail Alliance- September 18,19, or 20 for safety work session.
- Presentation from NH Fish and Game Commissioner Bruce Temple
- 3 Subcommittees to be formed- Land Use Change Tax, Draft of an Outline, Wetlands Overlay District

Events for Conservation Commission Calendar:

- Winter Street Farm, 344 Winter Street, Tomato Jam, August 29, 2026, 4PM-7PM
- Agriforestry Workshops, August 27, 2026, 5:30-7:00 PM, Meadow Road and Charlestown Road & August 28, 2026, 5:30 PM-7:00 PM, Piermont, NH
- Apple Pie Crafts Fair 2026, Saturday, Aug. 22nd, 9am-3pm, Newport Town Common
- NHACC Annual Conference, Saturday, November 7, 2026.
- Tree ID Course, September 10, 1 - 4 PM, Lab Session, Cheshire County Farm, River Rd, Westmoreland NH
- Tree ID Course, September 16, 2 - 4 PM, Field Session, Robin Hood Park, Roxbury St, Keene NH
- Tree ID Course, September 30, 2 - 4 PM, Field Session, Schadler Woodlot, 77 Peachblow Rd, Alstead NH
- Tree ID Course, October 14, 2 - 4 PM, Field Session, Cheshire County Farm, River Rd, Westmoreland NH
- Tree ID Course, October 28, 2 - 4 PM, Field Session, up on the Hill Conservation Area, Richardson Rd, Charlestown NH
- Tree ID Course, November 4, 2 - 4 PM, Field Session, Moody Park, Moody Park Rd, Claremont NH
- Tree ID Course, November 18, 1 - 4 PM, Lab Session, Monadnock Conservancy HQ, 82 Ashuelot St, Keene NH

Historic District Commission - August 27, 2026

A. **(HDC 2026-00006) 1852 MB 3240 LLC, Darien, CT-** Application for a certificate of appropriateness for removal of some organic matter, deteriorating brick and concrete, and some sand, to provide a uniform surface like the abutting buildings and for safety for ingress and egress with safety ramps and to repave the area at **32-40 Pleasant Street**. Tax Map 120 Lot 79. Zoning District: MU-**APPROVED**

B. Discussion of Fiske Free Library Roof Replacement

Planning Board - August 10, 2026 - Public Hearings:

A. **(PL 2026-00014) Liam Madden & Matthew Connors, Acworth NH -**Application for a conditional use permit for a 28.6 KW ground mounted accessory commercial solar array at **5 Acer Heights Road**. Tax Map 130 Lot 121. Zoning District: B2-**APPROVED**

Discussion:

A. Upper Valley Lake Sunapee Regional Planning Commission- Family- based Childcare Outreach & Capacity Project. – **Claremont agreed to be a part of the PILOT program**

Planning Board - August 24, 2026 - Public Hearings:

A. **(PL 2026-00015) 356 Washington LLC, West Springfield, MA**- Application for site plan approval for a 2,145 square foot coffee shop with drive thru and a 1,394 square foot ATM/ITM Canopy Structure at **356 Washington Street.** Tax Map 133 Lot 3. Zoning District: B2-**APPROVED**

B. **(PL 2026-000016) ReArch Company Inc, South Burlington, VT-** Application for site plan approval for interior adaptive reuse of floors 4-6 of 21 Water Street to 27 general-occupancy apartments. Tax Map 120 Lot 6. Zoning District: MU-**APPROVED**

August 3, 2026 - Zoning Board - Public Hearings:

A. **(ZO 2026-00006) Isaiah Higgins & Dorys Higgins, Brookline, MA**- Application for a density variance to permit a sixth unit at **236 North Street.** Tax Map 95 Lot 5. Zoning District: CR2 **(continued from 7/6/2026)- DENIED**

B. **(ZO 2026-00007) Mark Limoges, 296 Elm Street**- Application for a variance to reduce rear and side setbacks at **67 West Pleasant Street** for the construction of a porch and lean-to. Tax Map 143 Lot 27. Zoning District: R1-**CONTINUED TO 9/8/26**

C. **(ZO 2026-00008) 65 Pleasant Street LLC, Salem, NH-** Application for a variance from Section 22-387.1(4) to allow street level dwelling units in the Mixed-Use District at **65 Pleasant Street,** which fronts Pleasant Street between Opera House Square and Glidden Street. Tax Map 120 Lot 70. Zoning District: MU -**APPROVED**

Claremont Development Authority

August 5, 2026

- June 25, 2026 & June 30, 2026 minutes approved
- **56 Opera House Square update-** Blanc and Bailey explained that AEC has completed the HVAC connection and all that equipment is back on. Blanc and Bailey are very close to being complete.
- Rejected both bids for Realtors RFQ

- Approved having Chair Martha Maki sign an agreement for AKP Financial Services for a hourly rate of $75 per hour.
- CDA Strategic Discussion – Discussed Pros and Cons. Discussed property management and next steps. Discussion of a CDA Business Plan.

August 27, 2026- CDA Board Meeting - CANCELLED NO QUORUM

Claremont Arts, History and Culture Resources Preservation Commission-
August 11, 2026

- Minutes of June 16, 2026, approved.
- Public Schools Exhibit Closing September 22, 2026 from 4:00 pm to 5:00pm
- Next Exhibit will be "Claremont Fire Department"
- Fundraising for the Eagle is still continuing.
- Claremont Arts Walk was discussed and a Planning Session August 20, 2026
- Commission social media was discussed and how to gain traction.

Steering Committee for EPA Multipurpose Grant –
August 5, 2026

- Update from Todd Bridgeo, Weston & Sampson regarding the process of the smokestack removal from NHDES. This will require a Public Notice, public meetings, RFP for bids for clean-up.
- Contaminants on the Smokestack Site were discussed. He explained this property will have restrictions that will be recorded at the Registry of Deeds.

Energy Advisory Committee
August 20, 2026

- The Committee discussed the revised Committee Charter. The Chair proposed postponing further review of the revised Charter in order to prioritize work related to Community Power. The Committee reached consensus to proceed with Community Power work first and revisit the Charter at a later date.
- The Chair reported that several documents had been shared with Committee members, including due-diligence materials concerning Community Power Coalition of New Hampshire (CPCNH) and a preliminary comparison of CPCNH and Freedom Energy Logistics.
- Emily Manns, Principal of ECM Power and Chair of the Peterborough Energy Committee, provided a presentation concerning Community Power services on behalf of ECM Power and Good Energy. Ms. Manns discussed experience with Community Power programs beginning in approximately 2019 and Good Energy's experience in New Hampshire beginning approximately in 2020–2021. The presentation addressed energy-market procurement, supplier evaluation, competitive bidding, customer outreach, customer-service support, program branding, and website development. The presenter reported experience supporting approximately 90 programs in New England.
- Mr. Cougan reported that Grafton County had joined CPCNH. He also reported that two additional entities were considering participation; those entities were not confirmed during the meeting.

Welfare Department
58 Opera House Square
Claremont, New Hampshire 03743
Ph: (603) 542-7007
Fax: (603) 542-7048
Email: scarr@claremontnh.com
www.claremontnh.com

August 2026

213 contacts with the department, 130 of which were related to homelessness and/or eviction (61%).

The National Low Income Housing Coalition released its annual *Out of Reach* report in July, revealing that full-time workers in NH need to earn $39.24 per hour to afford a two-bedroom apartment, which is an increase of $4.16 per hour from last year. NH has moved from 12th to 8th nationally for the highest wages needed to afford a two-bedroom apartment. Attached is a graphic highlighting the findings. The full report is available at https://nlihc.org/oor

32 vouchers were processed for 18 cases, totaling $30,575.44:

Rent	$29,605.44*
Utilities	$ 970.00

***$1,776.00 in rental assistance applied to landlords' delinquent taxes per RSA 165:40-a*

An additional $30,866.16 in rental assistance is being held for 20 clients pending inspection and/or code compliance.

Received $1,438.11 reimbursement

Sczuka Dodson Fund	$ 200.00 Received
George Paul Fund	$1,286.00 Expended

On 8/12 Assistant Director Kristi White picked up our TEFAP delivery which consisted of 9 cases of commodities valued at over $250 for our in-house pantry. Food was distributed to 3 households during the month from our in-house pantry.

- 8/5 Staff attended the Sullivan County Community Partners meeting via Zoom, led by Beth Daniels, CEO, Southwestern Community Services
- 8/5 Staff attended a case conferencing meeting via MS Teams, which focuses on strategies for specific cases of chronically homeless individuals in Sullivan County, facilitated by members of the DHHS Bureau of Homeless Supports (BHS)
- 8/11 Director Carr met with Warm Welcome Shelter staff to discuss the upcoming winter opening
- 8/18 Director Carr met with Katina Cummings, Claremont Perinatal Community Coalition, to discuss their work in supporting pregnant and postpartum moms

Respectfully submitted,

Suzanne M. Carr
Welfare Director

NEW HAMPSHIRE #8*

In **New Hampshire,** the Fair Market Rent (FMR) for a two-bedroom apartment is **$2,040.** In order to afford this level of rent and utilities – without paying more than 30% of income on housing – a household must earn **$6,801** monthly or **$81,614** annually. Assuming a 40-hour work week, 52 weeks per year, this level of income translates into an hourly Housing Wage of:

$39.24
PER HOUR
STATE HOUSING WAGE

FACTS ABOUT **NEW HAMPSHIRE:**

STATE FACTS	
Minimum Wage	$7.25
Average Renter Wage	$21.68
2-Bedroom Housing Wage	$39.24
Number of Renter Households	151,369
Percent Renters	27%

MOST EXPENSIVE AREAS	HOUSING WAGE
Boston-Cambridge-Quincy HMFA	$56.56
Lawrence HMFA	$43.65
Western Rockingham County HMFA	$42.69
Portsmouth-Rochester HMFA	$42.19
Nashua HMFA	$40.90

MSA = Metropolitan Statistical Area; HMFA = HUD Metro FMR Area
* Ranked from Highest to Lowest 2-Bedroom Housing Wage, Includes District of Columbia and Puerto Rico

216
Work Hours Per Week At **Minimum Wage** To Afford a **2-Bedroom Rental Home** (at FMR)

167
Work Hours Per Week At **Minimum Wage** To Afford a **1-Bedroom Rental Home** (at FMR)

5.4
Number of Full-Time Jobs At **Minimum Wage** To Afford a **2-Bedroom Rental Home** (at FMR)

4.2
Number of Full-Time Jobs At **Minimum Wage** To Afford a **1-Bedroom Rental Home** (at FMR)

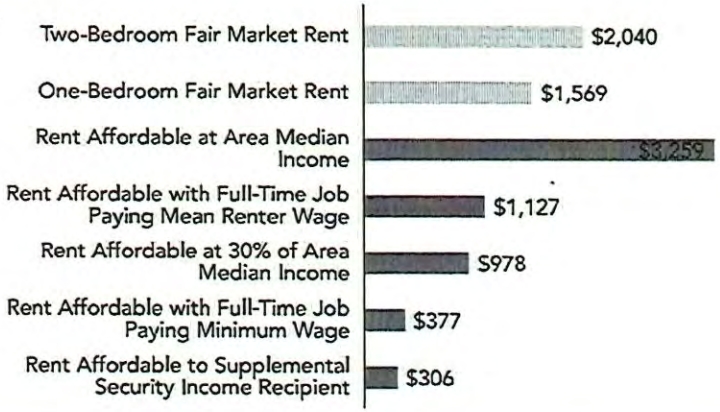

Claremont Community Television, Inc.
Balance Sheet
As of August 31, 2026

	Aug 31, 26	
ASSETS		
Current Assets		
Checking/Savings		
Claremont Savings Bank		105,003.25
Total Checking/Savings		105,003.25
Other Current Assets		
Edward Jones Investments		
Edward Jones Cash Account	9.82	
Edward Jones CD 8/24/26	55,000.00	
Edward Jones Mutual Funds Acct	54,991.84	
Total Edward Jones Investments		110,001.66
Total Other Current Assets		110,001.66
Total Current Assets		215,004.91
Fixed Assets		
Equipment		
1999	62,923.17	
2000	2,896.95	
2001	13,678.27	
2002	284.86	
2005	36,320.70	
2006	6,854.80	
2007	17,321.14	
2008	23,853.33	
2010	13,828.39	
2011	24,372.54	
2012	4,880.62	
2013	48,528.91	
2014	29,836.00	
2015	6,988.00	
2018	1,134.51	
2020	64,361.83	
2021	29,655.66	
2022	3,800.00	
2023		
City Hall Studio	10,000.00	
Total 2023	10,000.00	
2024	7,630.00	
Accumulated Depreciation	-348,000.00	
Total Equipment		61,149.68
Station Start Up Expenses		
Accumulated Depreication	-2,948.11	
Station Start Up Expenses - Other	2,948.11	
Total Station Start Up Expenses		0.00
Total Fixed Assets		61,149.68
TOTAL ASSETS		**276,154.59**
LIABILITIES & EQUITY		
Liabilities		
Current Liabilities		
Other Current Liabilities		
Payroll Liabilities		-128.80
Total Other Current Liabilities		-128.80
Total Current Liabilities		-128.80

Claremont Community Television, Inc.
Balance Sheet
As of August 31, 2026

	Aug 31, 26
Total Liabilities	-128.80
Equity	
Retained Earnings	221,475.75
Net Income	54,807.64
Total Equity	276,283.39
TOTAL LIABILITIES & EQUITY	276,154.59

Claremont Community Television, Inc.
Profit & Loss
August 2026

	Aug 26	
Ordinary Income/Expense		
Income		
City Franchise/Tech Fund		60,000.00
Contributions		
Grants	10,000.00	
Contributions - Other	500.00	
Total Contributions		10,500.00
Interest Earned		1.38
Total Income		70,501.38
Expense		
Office		
Bank Fees	10.00	
Total Office		10.00
Payroll and Expenses		
Benefits		
Health Insurance Subsidy	0.00	
Total Benefits	0.00	
Executive Director	0.00	
Meeting Videographers	652.50	
Payroll Taxes	118.19	
Program Coordinator	513.00	
Project Manager	250.00	
Total Payroll and Expenses		1,533.69
Professional Services		
Professional Fees	125.00	
Total Professional Services		125.00
Station Expenses		
Live U Costs	242.85	
Software and supplies	20.99	
Total Station Expenses		263.84
Total Expense		1,932.53
Net Ordinary Income		68,568.85
Net Income		**68,568.85**

Claremont Community Television, Inc.
Profit & Loss
January through August 2026

		Jan - Aug 26
Ordinary Income/Expense		
Income		
City Franchise/Tech Fund		120,000.00
Contributions		
Grants	11,000.00	
Contributions - Other	500.00	
Total Contributions		11,500.00
Interest Earned		1,228.44
Total Income		132,728.44
Expense		
Educational Expenses		
Professional Development	449.00	
Total Educational Expenses		449.00
Office		
Bank Fees	368.00	
Board & Administration	144.10	
State of NH Report Fees	127.00	
Supplies	42.64	
Telephone and ISP	2,991.74	
Total Office		3,673.48
Payroll and Expenses		
Benefits		
Health Insurance Subsidy	2,400.00	
SIMPLE IRA	1,225.00	
Total Benefits	3,625.00	
Executive Director	40,833.31	
Meeting Videographers	4,488.75	
Payroll Taxes	4,174.93	
Program Coordinator	2,810.89	
Project Manager	3,500.00	
Workmans Comp Ins 2026-2027	602.50	
Total Payroll and Expenses		60,035.38
Professional Services		
Consulting	1,500.00	
Professional Affiliation Fees	209.00	
Professional Fees	1,500.00	
Total Professional Services		3,209.00
Sponsorship		
Rotary Summer Backpack	500.00	
Total Sponsorship		500.00
Station Expenses		
Equipment Consumables	2,192.80	
Live U Costs	4,040.85	
Software and supplies	3,820.29	
Total Station Expenses		10,053.94
Uncatagorized Expenses		0.00
Total Expense		77,920.80
Net Ordinary Income		54,807.64
Net Income		**54,807.64**

Airport Advisory Board		2026	
	26-Jan	27-Apr	28-Jul
Allyn Girard	X	X	NO QUORUM
Arthur LaPorte	X	X	
Paul Dube	X	X	
Dale Girard	X	X	
David Carton	X	X	
Michael LaFont	X	X	

Claremont Arts, History and Culture Resources Preservation Commission	2026								
	21-Jan	10-Feb	10-Mar	7-Apr	12-May	9-Jun	6/16/2026 (rescheduled 6/9 meeting)	11-Aug	8-Sep
Jill Chastenay	X	X	X	CANCELLED NO QUORUM	X	CANCELLED NO QUORUM	X	Absent	
Felicia Dalke	X	X	X		X		X	X	
David Messier	Absent	X	X		Absent		Absent	X	
Mark LaFontaine	X	X	X		X		X	X	
Nicholas Koloski	X	X	Absent		X		X	X	
Raymond Gagnon	Absent	Absent	X		Absent		X	X	
Joshua Nelson	X	X	X		X		X	X	
Rachel Lewis	Absent	X	Absent		X		Absent	Absent	
Carla Shafer	X	X	X		X		X	X	

Claremont Development Authority **2026**

	22-Jan	26-Feb	26-Mar	23-Apr	28-Apr	28-May	25-Jun	30-Jun	23-Jul	5-Aug	27-Aug
Robert Porter	X	CANCELLED	Absent	X	X	X	X	X	CANCELLED	X	CANCELLED
Martha Maki	X		X	X	X	X	X	X		X	
Felicia Dalke	X		X	X	X	X	X	X		X	
Dale Girard	X		X	X	X	X	X	X		X	
William Limoges	X		X	X	X	X	X	Absent		X	
Gary Merchant	Zoom		X	X	X	X	X	X		Absent	
David Finnerty	X		Absent	X	Absent	X	X	X		Absent	

CCTV	2026				
	20-Jan	17-Mar	19-May	21-Jun	18-Aug
Chris Cogswell	X	X	X	CANCELLED	Absent
Dana McGrath	X	X	X		X
Kevin Tyson	X	Absent	X		X
Joella Merchant	Absent	X	X		X
Sean McCarthy	X	X	X		Absent
Josh Nelson	X	X	X		X
Loren Howard	Absent	X	X		Absent
Majestic Terhune	n/a	n/a	n/a		X

Claremont Housing Authority	2026											
	27-Jan	24-Feb	24-Mar	28-Apr	26-May	11-Jun	18-Jun	30-Jun	8-Jul	28-Jul	25-Aug	28-Aug
Charlene Lovett	X	Absent	X	X	X	X	X	X	X	X	X	
Mark Chamberlain	Via Phone	X	via phone	X	X	X	X	X	X	X	X	
Candace Reed	X	X	X	X	X	X	X	X	X	X	X	
Susan Mochel	X	X	X	X	X	X	X	X	X	X	X	
Erin Bruce- Resident Commissioner	n/a	n/a	n/a	X	X	X	X	X	X	X	X	

Conservation Commission Attendance - 2026

	15-Jan	19-Feb	19-Mar	Special Meeting 26-Mar	16-Apr	21-May	18-Jun	16-Jul	20-Aug	17-Sep	15-Oct	19-Nov	17-Dec	Total
Dickerman, Gary	X	X	X	X	X	X	X	X	X					
Hurley, Jack	X	X	X	X	X	X	X	X	X					
Magnuson, Scott	X	X	X	Absent	X	Absent	Absent	Absent	Absent					
Peabody, Eric	X	X	X	X	X	X	X	X	X					
Ruffin, Eric	X	X	X	X	X	X	X	X	X					
Wood, Steve	X	X	X	Absent	X	X	Absent	X	X					
Zengota, Eric	X	Absent	X	X	X	Absent	Absent	Absent	X					
Erin Graf- Greenrose	X	X	X	X	X	X	Absent	Absent	X					
Cogswell, Christopher	Absent	X	X	X	Absent	X	X	X	Absent					

Fiske Free Library	2026					
	1/28/2026	2/25/2026	3/18/2026	4/15/2026	5/20/2026	6/17/2026
John Hurley	X	X	X	Absent	X	X
Cindi Cleveland	X	X	X	X	X	X
Sharon Wood	X	X	X	X	X	X
Arthur Vidro	X	X	X	X	X	X
Raymond Gagnon	Absent	X	Absent	Absent	Absent	Absent
Chiara Tosi-Nelson	X	absent	X	X	X	X
Annette Dauphinais	n/a	absent	X	X	X	X

HDC Attendance - 2026

	22-Jan	26-Feb	26-Mar	23-Apr	28-May	25-Jun	23-Jul	27-Aug	24-Sep	22-Oct	19-Nov	17-Dec	Total
Erin Angley-Cohen	CANCELLED	CANCELLED	CANCELLED	CANCELLED	X	Absent	X	X					
David Messier					X	X	Absent	X					
Jill Chastenay					X	Absent	Absent	Absent					
Richard Wahrlich					Absent	X	X	X					
Tom Luther					X	X	X	X					
William Greenrose					X	X	X	Absent					

* Note meetings are cancelled due to no applications being submitted

Parks and Recreation Commission **2026**

	19-Jan	9-Feb	9-Mar	13-Apr	11-May	8-Jun
Robert L. Walker II	X	Absent	X	absent	CANCELLED	CANCELLED
Allyn Girard	X	X	X	absent		
Jeffrey Chase	X	X	X	X		
Eric Zengota	X	X	X	X		
Sheila Rook	X	X	X	X		
Heather Irish	X	X	X	X		
Ken Burke	X	X	X	absent		
Michael Theroux	X	X	X	X		
Molly Tremblay	X	X	X	absent		
Gary Dickerman	n/a	n/a	absent	X		
Tina Bergeron	n/a	n/a	absent	absent		

PLANNING BOARD ATTENDANCE 2026:

	12-Jan	26-Jan	9-Feb	23-Feb	9-Mar	23-Mar	13-Apr	27-Apr	11-May	Tuesday 26-May	8-Jun	22-Jun	13-Jul	27-Jul	10-Aug	24-Aug
Bergeron, Rick	n/a	n/a	n/a	n/a	n/a	n/a	n/a	n/a	n/a	n/a	n/a	n/a	n/a	X	X	X
Burdick, Dakin			X	X	X		X		Absent	X	Absent	X	Absent	Absent	Absent	X
Guinel De France, Maxime J.			X	X	X		X		X	X	X	X	Absent	X	X	X
Kolenda, Bruce			X	X	X		X		X	X	X	X	X	Absent	X	X
Koloski, Nicholas			X	X	X		X		X	X	Via Phone	Absent	Absent	Absent	Via Phone	Absent
Matteau, Debora			X	X	X		X		X	X	X	X	X	X	X	X
Nelson, Jonathan			Absent	X	X		X		X	X	X	Absent	X	X	X	X
Sanborn, G. Michael			X	X	X		X		X	X	X	X	X	X	X	X
Wahrlich, Richard			X	X	X		X		X	X	X	X	X	X	X	X

TIF - Downtown	2026
	6/3/2026
Martha Maki	X
Robert H. Porter	X
Felicia Dalke	X
Gary Merchant	Absent

Trustees of Trust Funds	2026
	7/30/2026
Clay Hawkins	X
Tina Bergeron	X
Marilyn Harris	X

Upper Valley-Lake Sunapee Regional Planning Commission					
	13-Aug	11-Feb	15-Oct	8-Apr	10-Jun
Tom Luther	X	X	Absent		
Richard Wahrlich	Absent	Absent	X		

Zoning Board Attendance - 2026

	5-Jan	2-Feb	2-Mar	6-Apr	4-May	1-Jun	6-Jul	3-Aug	8-Sep	5-Oct	2-Nov	7-Dec	Total
Collins, Richard	Absent	CANCELLED	X	X	CANCELLED	CANCELLED	X	X					
Dean, John	X		X	X			X	X					
Hemingway, Wayne	Absent		X	Absent			X	X					
Hurd, Michael	X		Absent	X			X	X					
LaFontaine, Aran	Absent		X	X			X	Absent					
Lemieux, Michael	X		X	Absent			Absent	X					
Petrin, James	X		X	X			Absent	Absent					

* Meetings are CANCELLED if there are no applications to be acted upon.

* Attendance is required at a minimum of 8 meetings in a calendar year

***Note at the 4/6 meeting Michael Lemieux & Wayne Hemingway seats expired 3/31 reappointment at 4/8

CITY OF
CLAREMONT

Boards, Committees and Commissions
14 North Street
Claremont, NH 03743
Ph: (603) 504-0347
Fax: (603) 542-7033
abenoit@claremontnh.com

July 31, 2026

To: Julia Bizzarro,
Executive Assistant

From: Amanda Benoit
Resource Coordinator

Re: Appointment Application

Attached please find an application to Serve on a Board or Committee from Charlotte Lacoste.

Charlotte Lacoste would like to be appointed to Seat A1 on the Claremont Arts, History and Culture Resources Preservation Commission.

The new term will expire on 5/31/2028.

CLAREMONT

Claremont Arts, History and Culture Resources Preservation Commission

MEMBERS

Seat 1:
Rachel Lewis
3 Perrotto Ave
Claremont, NH 03743
813-304-8443
rachel@planeinsurance.com
Apt: 8/13/2025
Term Expires: **5/31/2027**

Seat 2:
Jill Chastenay
151 Winter Street
Claremont, NH 03743
Tel: 603-504-5069
Email: yoda1974@hotmail.com
Apt: 6/11/2025
Term Expires: **5/31/2028**

Seat 3:
Felicia Brych Dalke (Chair)
64 Charlestown Road
Claremont, NH 03743
Tel: 603-558-8468
felicia@nwinstatemakerspaces.org
Apt: 6/11/2025
Term Expires: **5/31/2028**

Seat 4:
David Messier
8 Bailey Avenue
Claremont, NH 03743
Tel: 542-2263 (h); 477-0210 (c); 504-6902 (w)
davidmessier603@gmail.com.
Apt: 5/8/2024
Term Expires: **5/31/2027**

Seat 5:
Joshua Nelson
111 South Street
Claremont, NH 03743
603-558-0315
claremontv8@gmail.com
Apt: 6/10/26
Term Expires: **5/31/2029**

Seat 6:
Christine Hawkins
295 Windsor Road
Claremont, NH 03743
Tel: 603-381-8458
christinehawkins@comcast.net
Apt: 8/12/26
Term Expires: **5/31/2027**

Seat 7:
Mark Lafontaine
364 Old Newport Road
Claremont, NH 03743
Tel:860-455-5668
lafontainemarka@gmail.com
Apt: 6/10/26
Term Expires: **5/31/2029**

City Councilor (ex officio)
Nicholas Koloski
3 Princeton Street
Claremont, NH 03743
Tel: 543-7570
nkoloski@council.claremontnh.com
Apt: 1/14/26
Term Expires: **12/31/2027**

ALTERNATE MEMBERS

SEAT A1:
VACANT
Claremont, NH 03743
Tel:
Apt:
Term Expires: **5/31/2028**

SEAT A2:
Carla Shafer
364 Old Newport Road
Claremont, NH 03743
Tel: 860-617-0922
lafontainemarka@gmail.com
Apt: 6/10/26
Term Expires: **5/31/2029**

SEAT A3:
Raymond Gagnon
4 Warren Street
Claremont, NH 03743
603-477-7135
gagnon03743@gmail.com
Apt: 7/8/26
Term Expires: **5/31/2029**

SEAT A4:
VACANT

Apt:
Term Expires: **5/31/2027**

CLAREMONT

Claremont Arts, History and Culture Resources Preservation Commission

Term: 3 Years **Appointment**: By City Council
Election of Officers: January of Each Year
Meetings: The Commission meets as needed, but shall meet a minimum of twice each calendar year. Annual meeting in February, or at such other time as determined by the Commissions, to review the prior year's activities and plan for the upcoming year.
Function: The Commission is established by the Claremont City Council pursuant to NH RSA's 47:17 XV and 674:2, III(h). The geographic focus of the Arts, History and Culture Commission's activities shall be Claremont, but when appropriate, the Arts, History, and Culture Commission may work to promote historic assets, arts, and culture in the Greater Claremont Area, consistent with intent of this section. The purpose of the Arts, History, and Culture Commission (or "the commission") is to implement the Arts, History, and Culture Resources Master Plan by:
(1) Highlighting our heritage to inspire a sense of place and pride in the City of Claremont.
(2) Identifying, strengthening, promoting, and marketing Claremont's historic and cultural assets, infrastructure, and artistic treasures;
(3) Facilitating community involvement in the Arts;
(4) Recognizing the economic power of the arts, history, and culture in Claremont;
(5) Invigorating Claremont with the emphasis on the City's unique blend of old-fashioned charm and progressive vision; and
(6) Acting on the City's behalf on matter of arts, history, and culture.

CITY OF CLAREMONT

RECEIVED
AUG 31 2026
BY: Amanda

PLANNING AND DEVELOPMENT
14 NORTH STREET
CLAREMONT, NH 03743
PH: (603) 504-0347 FAX: (603) 542-7033
EMAIL: abenoit@claremontnh.com

APPLICATION TO SERVE ON A BOARD, COMMISSION OR COMMITTEE

Date: 8/18/2026

All fields are required – *Please note that all applicants who are appointed will be required to be sworn in*

Applicant Name:	Charlotte Lacoste
Street Address:	32 Severance St
Mailing Address:	Claremont, NH 03743
Telephone:	(407) 218-9470
E-mail:	charlotte_lacoste@aol.com

Please specify the Board/Commission sought: Claremont Arts, History, and Culture Resources Preservation Commission
Is this application for reappointment? NO

If seeking appointment to the Claremont Police Commission, please state your political party affiliation:

If applying for a seat on the Board of Appeals, please circle the field(s) in which you have the requisite training and experience:

Architecture | Engineering | Construction | Mechanical | Plumbing | Electrical

Occupation or Place of Employment:	Four Life Design Build
Employer and Employment Address:	5357 US-5, Windsor, VT 05089
Employment Telephone:	(802) 230-6566
May you be contacted at work?	Yes or (No)

Education:

Some college, stop going during Covid. My background interior Design & Fine Arts.

Community Experience and Affiliations (both Claremont and Elsewhere):

Keene - Volunteer Art Feast
Bethlahan & Littleton Area - Volunteer Community mural restoration
Claremont - Involved with the Makers Space.

How long have you resided in Claremont?	2019 Fall - Currently

Why would you like to serve in this capacity?
Include experience or expertise relevant to board or committee for which you are applying.

I want to help other artists and the community more positive growth in areas were it needs it.

Charlotte Lacosta 8/18/24

Have you served on any City Board or Committee? Which ones and when?
NO
Have you contacted the Chair of the Board/Committee to learn about the Board's mission/duties and the expectations of its members (with regard to attendance, time commitment, training, etc.)?
Yes or No
Have you attended any meetings of the Board/Committee on which you want to serve? | **Yes or No**
Can you commit to attend all meetings? | **Yes or No**
Please provide a brief biography? Attach resume, if desired.
Are you related to any City employee or member of any City Board/Committee, or have you ever conducted business with the City, any of its employees or members of the City's Boards/Committees? Provide details
NO

Have you now or have you ever been cited for violating any local, state or federal ordinance, law or regulation related to land use, property maintenance, International Building Codes, or other legal requirement pertaining to the subject of the Board/Committee for which you are applying? Provide details.
NO

If you do not receive the appointment you are requesting, would you be interested in serving on another Board or Committee? Yes or No

BY SUBMITTING THIS APPLICATION, YOU UNDERSTAND THAT:

1. All members of City Boards/Committees are subject to the City's Code of Conduct;
2. This application is for consideration and does not mean you will necessarily be appointed to this board or committee;
3. You may be contacted to follow-up on any questions pertaining to the application; and
4. This application may be forwarded to the City Council for consideration at the Mayor's discretion
5. All applicants are required to submit their application to the Boards and Commissions Coordinator
6. All board members are required to be sworn in before they can participate or vote in any meetings
7. At the end of your term, if you would like to be re-appointed you will be required to submit a new application and be sworn in;
8. This application becomes public record upon submission.

Applicant Signature

Charlotte Kim Lacoste

32 Severance St Claremont, NH 03473 (407) 218-9470 · charlotte_lacoste@aol.com ·
https://charlottelacostcart.wixsite.com/charlottelacoste

» Objective

My Creative abilities, and Customer Service skills are a benefit to any company. With that I will provide productive services within myself and encourage others while being an effective member of the team.

» Education

Seminole State College: Heathrow, FL; Fall 2015- Currently Attending for Interior Design.
Valencia Community College: Orlando, FL; August 2011-August 2015 for Fine Arts

» Professional Experience

Freelance Artist., Orlando, FL
Painter/Decorator; Present

- Abstract & Naturalistic painter
- 4 years in Duck Stamp Sanibel, FL
- U.S. Congressional Art Competition
- Mural Artist
- Art Instructor
- Paint-n-Sip Instructor

Citywalk/Universal Studios -Margaritaville - Mel's Drive In., Orlando, FL
Food and Beverage Stocker /Retail, 2012-2017

- Stocking
- Inventory
- Retail Sales/ Cashier
- Opening/ Closing Store
- Bar Carts - Mix Drinks
- Restaurants
- Halloween Horror Nights Beer Cart Vendor

Rifle Paper Co., Winter Park, FL
Assembly Specialist/ Packaging, Aug.2014-Aug 2015

- Packaging Stationery products to over 4,000 stores
- Detail Hands-on Products like (tying, sticker placement)
- Labeling Product
- Check Inventory

Crate and Barrel., Orlando, FL 2017-Jan. 2018
Sales Associate, part-time & seasonally

- Sales: Closing Sales and Creating Quotes
- Phone Sales
- Customer Service
- Check Inventory

Ethan Allen., Winter Park, FL 2017-Sept.2019
Design Coordinator

- Customer Service

- Assistant Administer
- Assistant Designer
- Receptionist
- Product Hand-Drawing Elevation
- Space Planning
- Daily Reports
- Sale : Closing Sales and Creating Quotes

Scan Design., Altamonte, FL Sept.2019 -Dec.2020

Interior Design Consultant

- Customer Service
- European & Contemporary Furniture/ Transitional Design
- SketchUp
- House Calls
- Product Hand-Drawing Elevation
- Space Planning
- Visual Merchandising
- Sale : Closing Sales and Creating Quotes
- Coordinate with Vendors

Whitney Brothers., Keene, NH March 2023 - March 2025

Assistant Engineer

- Customer Service
- Product Design and Design Jigs for assembly
- AutoCad - Microvellum
- Safety Committee & Community Engagement Committee
- Product Design/Hand-Drawings
- Space Planning
- Visual Merchandising
- Trade Shows
- Product Staging
- Project Director - Organizing Model Shoots

Appalachian Mountain Club., Bretton Woods, NH March. 2025-Aug. 2025

Head House Keeper (Seasonal)

- Customer Service
- Assisting the Manger
- Housekeeping
- Scheduling Daily tasks for the team.
- Volunteering in Events.

New Hampshire State Parks., Jeffery, NH Aug. 2025-Nov.2025

Retail Sales/Team Member (Seasonal) at Monadnock State Park (Headquarters)

- Customer Service
- Retail Sales
- Ticket Booth/Parking Guide
- Campground Maintenance
- Document Incident Reports
- Volunteer with Mountain Patrol

Foremost Builders., West Lebanon, NH Oct. 2025-May 2026

Director of First Impressions/ Designer Assistant

- Customer Service
- Material Selections - Work with clients home selections
- Marketing

- Sales Assistant
- Document SOPs
- Coordinate Events for the company

Four Lite Design Build., Windsor, VT June. 2026-Currently

Interior Designer/Selections Manager

- Customer Service
- Material Selections - Work with clients home selections
- Marketing
- Estimating
- Document SOPs
- Ordering selections

» Skills, Achievements, and Activities

Experience in Revit, AutoCAD, SketchUP, Interior Space Planning, Hand Drafting, Photoshop, Introduction to 2020 Kitchen Design, Mozaik, V-Carve and Chief Architect.

Proficient in Microsoft Office. Fine Arts Painter, Art in Park Keene, NH, Worked on a Community Mural project in Keene, NH, and Solo pop up Art Shows, Vermont Wildlife Festivals. Artist in Residence in Claremont Makers Space.

Volunteer at a Local Upholstery Shop, Historic Window Repairs, Raptor Bird Refuge in Apopka, F, Vermont Wildlife, AMC in Crawford Notch, NH State Parks, MOCO Mural Projects, Volunteer at the Claremont Makers Space.

» References

Jennifer Griffin, Bellows Falls Hydro Plant Acworth, NH (603) 966-0477

CITY OF CLAREMONT

Planning and Development Department
Phone: (603) 504-0340
Email: ggavan@claremontnh.com
www.claremontnh.com

MEMORANDUM -

To: City Manager, Honorable Mayor, Assistant Mayor & City Council
From: Gina Gavan, Director of Planning & Development, and Economic Development
Date: September 9, 2026
RE: Resolution 2026 – 18 Amended and Restated - NBRC Sugar Revitalization Grant

---

The city of Claremont was awarded a Northern Borders Regional Commission (NBRC), grant in the amount of $430,000.00 in the Fall 2025 Catalyst funding cycle.

The NBRC requires documentation proving authorization of an executive, the "Authorized Official, "to sign all NBRC investment documents on the applicant's behalf. Only the authorized official specified in the resolution can sign NBRC documents that legally bind the applicant.

Once a project is awarded funding, should the Authorized Official (AO) change, this triggers an amendment to the grant. If the Authorized Official changes during the performance period of an award, grantees are required to provide NBRC with an updated Authorized Official Resolution and an award, Resolution and an executed Key Contacts Form to document the Change. The Key Contacts Form is done administratively and there can be Future Key Contacts named. The Planning & Development Resource Coordinator, Amanda Benoit is a Key Contact, and now the AO must change due to the requirements.

This resolution dissolves Nancy Bates as the Authorized Official (AO) and names Gina Gavan, Director of Planning & Development as the AO, and is authorized to apply for, accept, and expend grant funds from the Northern Borders Regional Commission (NBRC), and to sign all NBRC investment documents that bind the applicant.

The award is to advance the Sugar River Revitalization and Brownfields Redevelopment Project by improving pedestrian access and preparing sites for community and commercial use. The project will transform a remediated brownfield into a riverwalk and public gathering space. This initiative supports outdoor recreation, tourism and economic development in Sullivan County.

AMENDED AND RESTATED RESOLUTION 2026-18

NBRC Grant – Sugar River Revitalization

WHEREAS the Claremont City Council approved and adopted Resolution 2026-18 on October 8, 2025. The primary goal to apply for up to $430,000.00 in grant funds from Northern Borders Regional Commission (NBRC) to be used for the Sugar River Revitalization and Brownfields redevelopment Project, and if the City is awarded the City Council will accept and expend up to $430,000.00 with a 20% match to support the Sugar River Revitalization and Brownfields redevelopment Project; and

WHEREAS an amendment to Resolution 2026-18 is required to specifically name a designee,

NOW THEREFORE the fifth (5th) paragraph is hereby amended and restated as follows:

> **BE IT FURTHER RESOLVED THAT** the Director of Planning and Development, Gina Gavan, is hereby authorized to apply for, accept, and expend grant funds from the Northern Borders Regional Commission (NBRC), and to sign all NBRC investment documents that bind the applicant. (*2/3 Vote Required*).

All other provisions of Resolution 2026-18 shall remain in full force and effect

The Clerk is authorized and directed to file an attested copy of this Amended and Restated Resolution in the record of proceedings of the City Council, which record shall be open to public inspection; and

All actions undertaken by the City consistent with this resolution are hereby confirmed, ratified and approved. (*Majority Vote Required*)

Dated this 9th day of September 2026, the City of Claremont, County of Sullivan, State of New Hampshire.

AYES	_____	ABSENT	_____
NAYS	_____	ABSTAIN	_____

CERTIFICATION

I, Julia A. Bizzarro, the undersigned officer, certify that the foregoing Resolution was adopted by the City Council of Claremont, New Hampshire, at a meeting, duly noticed, and held on September 9, 2026.

_____

Julia A. Bizzarro
Clerk to the Council

City Managers Office
58 Opera House Square
Claremont, New Hampshire 03743
Ph: (603) 542-7002

CITY OF CLAREMONT

Memorandum

To: Honorable Mayor and Council Members
From: Richard Bergeron, City Manager
Date: 2026-09-09
Re: Conduit License – Fidium Fiber

Fidium Fiber has approached the City with a request to install utility conduit within the locations referenced in the attached motion.

The proposed work covers the following four areas:

- Sugar River Road/Case Hill Road
- Lincoln Heights
- Nelmar Heights
- East Green Mountain Road

These areas are currently served by Consolidated Communications' direct-buried copper facilities. The purpose of this project is to replace and upgrade that existing copper network by installing communication conduit, as shown on the attached plans, for new Fidium fiber-optic facilities. Consolidated's existing copper facilities will eventually be decommissioned as customers are transitioned to fiber.

This is not a request to introduce a new utility provider or establish an entirely new utility corridor. Consolidated already provides service within these areas, and the proposed conduit routes connect to existing utility poles, communication pedestals, and other existing Consolidated facilities. The conduit is being installed to modernize and replace the existing direct-buried communication infrastructure.

This request requires the requestor to apply for a conduit license, akin to a pole license, through the City. This is a standard municipal process, and the City Manager needs Council authorization to sign the license agreement.

Attached is a motion granting the City Manager said authorization, a copy of the proposed plans, and a copy of the proposed license agreements for Council's consideration.

City Managers Office
58 Opera House Square
Claremont, New Hampshire 03743
Ph: (603) 542-7002

CITY OF CLAREMONT

Memorandum

To: Honorable Mayor and Council Members
From: Richard Bergeron, City Manager
Date: 2026-09-09
Re: Conduit License – Fidium Fiber

Fidium Fiber has approached the City with a request to install utility conduit within the locations referenced in the attached motion.

The proposed work covers the following four areas:

- Sugar River Road/Case Hill Road
- Lincoln Heights
- Nelmar Heights
- East Green Mountain Road

These areas are currently served by Consolidated Communications' direct-buried copper facilities. The purpose of this project is to replace and upgrade that existing copper network by installing communication conduit, as shown on the attached plans, for new Fidium fiber-optic facilities. Consolidated's existing copper facilities will eventually be decommissioned as customers are transitioned to fiber.

This is not a request to introduce a new utility provider or establish an entirely new utility corridor. Consolidated already provides service within these areas, and the proposed conduit routes connect to existing utility poles, communication pedestals, and other existing Consolidated facilities. The conduit is being installed to modernize and replace the existing direct-buried communication infrastructure.

This request requires the requestor to apply for a conduit license, akin to a pole license, through the City. This is a standard municipal process, and the City Manager needs Council authorization to sign the license agreement.

Attached is a motion granting the City Manager said authorization, a copy of the proposed plans, and a copy of the proposed license agreements for Council's consideration.

City Managers Office
58 Opera House Square
Claremont, New Hampshire 03743
Ph: (603) 542-7002

CITY OF CLAREMONT

Memorandum

To: Honorable Mayor and Council Members
From: Richard Bergeron, City Manager
Date: 2026-09-09
Re: Conduit License – Fidium Fiber

Fidium Fiber has approached the City with a request to install utility conduit within the locations referenced in the attached motion.

The proposed work covers the following four areas:

- Sugar River Road/Case Hill Road
- Lincoln Heights
- Nelmar Heights
- East Green Mountain Road

These areas are currently served by Consolidated Communications' direct-buried copper facilities. The purpose of this project is to replace and upgrade that existing copper network by installing communication conduit, as shown on the attached plans, for new Fidium fiber-optic facilities. Consolidated's existing copper facilities will eventually be decommissioned as customers are transitioned to fiber.

This is not a request to introduce a new utility provider or establish an entirely new utility corridor. Consolidated already provides service within these areas, and the proposed conduit routes connect to existing utility poles, communication pedestals, and other existing Consolidated facilities. The conduit is being installed to modernize and replace the existing direct-buried communication infrastructure.

This request requires the requestor to apply for a conduit license, akin to a pole license, through the City. This is a standard municipal process, and the City Manager needs Council authorization to sign the license agreement.

Attached is a motion granting the City Manager said authorization, a copy of the proposed plans, and a copy of the proposed license agreements for Council's consideration.

City Managers Office
58 Opera House Square
Claremont, New Hampshire 03743
Ph: (603) 542-7002

CITY OF CLAREMONT

Memorandum

To: Honorable Mayor and Council Members
From: Richard Bergeron, City Manager
Date: 2026-09-09
Re: Conduit License – Fidium Fiber

Fidium Fiber has approached the City with a request to install utility conduit within the locations referenced in the attached motion.

The proposed work covers the following four areas:

- Sugar River Road/Case Hill Road
- Lincoln Heights
- Nelmar Heights
- East Green Mountain Road

These areas are currently served by Consolidated Communications' direct-buried copper facilities. The purpose of this project is to replace and upgrade that existing copper network by installing communication conduit, as shown on the attached plans, for new Fidium fiber-optic facilities. Consolidated's existing copper facilities will eventually be decommissioned as customers are transitioned to fiber.

This is not a request to introduce a new utility provider or establish an entirely new utility corridor. Consolidated already provides service within these areas, and the proposed conduit routes connect to existing utility poles, communication pedestals, and other existing Consolidated facilities. The conduit is being installed to modernize and replace the existing direct-buried communication infrastructure.

This request requires the requestor to apply for a conduit license, akin to a pole license, through the City. This is a standard municipal process, and the City Manager needs Council authorization to sign the license agreement.

Attached is a motion granting the City Manager said authorization, a copy of the proposed plans, and a copy of the proposed license agreements for Council's consideration.

City Managers Office
58 Opera House Square
Claremont, New Hampshire 03743
Ph: (603) 542-7002

CITY OF CLAREMONT

Memorandum

To: Honorable Mayor and Council Members
From: Richard Bergeron, City Manager
Date: 2026-09-09
Re: Conduit License – Fidium Fiber

Fidium Fiber has approached the City with a request to install utility conduit within the locations referenced in the attached motion.

The proposed work covers the following four areas:

- Sugar River Road/Case Hill Road
- Lincoln Heights
- Nelmar Heights
- East Green Mountain Road

These areas are currently served by Consolidated Communications' direct-buried copper facilities. The purpose of this project is to replace and upgrade that existing copper network by installing communication conduit, as shown on the attached plans, for new Fidium fiber-optic facilities. Consolidated's existing copper facilities will eventually be decommissioned as customers are transitioned to fiber.

This is not a request to introduce a new utility provider or establish an entirely new utility corridor. Consolidated already provides service within these areas, and the proposed conduit routes connect to existing utility poles, communication pedestals, and other existing Consolidated facilities. The conduit is being installed to modernize and replace the existing direct-buried communication infrastructure.

This request requires the requestor to apply for a conduit license, akin to a pole license, through the City. This is a standard municipal process, and the City Manager needs Council authorization to sign the license agreement.

Attached is a motion granting the City Manager said authorization, a copy of the proposed plans, and a copy of the proposed license agreements for Council's consideration.

City Managers Office
58 Opera House Square
Claremont, New Hampshire 03743
Ph: (603) 542-7002

CITY OF CLAREMONT

Memorandum

To: Honorable Mayor and Council Members
From: Richard Bergeron, City Manager
Date: 2026-09-09
Re: Conduit License – Fidium Fiber

Fidium Fiber has approached the City with a request to install utility conduit within the locations referenced in the attached motion.

The proposed work covers the following four areas:

- Sugar River Road/Case Hill Road
- Lincoln Heights
- Nelmar Heights
- East Green Mountain Road

These areas are currently served by Consolidated Communications' direct-buried copper facilities. The purpose of this project is to replace and upgrade that existing copper network by installing communication conduit, as shown on the attached plans, for new Fidium fiber-optic facilities. Consolidated's existing copper facilities will eventually be decommissioned as customers are transitioned to fiber.

This is not a request to introduce a new utility provider or establish an entirely new utility corridor. Consolidated already provides service within these areas, and the proposed conduit routes connect to existing utility poles, communication pedestals, and other existing Consolidated facilities. The conduit is being installed to modernize and replace the existing direct-buried communication infrastructure.

This request requires the requestor to apply for a conduit license, akin to a pole license, through the City. This is a standard municipal process, and the City Manager needs Council authorization to sign the license agreement.

Attached is a motion granting the City Manager said authorization, a copy of the proposed plans, and a copy of the proposed license agreements for Council's consideration.

City Managers Office
58 Opera House Square
Claremont, New Hampshire 03743
Ph: (603) 542-7002

CITY OF CLAREMONT

Memorandum

To: Honorable Mayor and Council Members
From: Richard Bergeron, City Manager
Date: 2026-09-09
Re: Conduit License – Fidium Fiber

Fidium Fiber has approached the City with a request to install utility conduit within the locations referenced in the attached motion.

The proposed work covers the following four areas:

- Sugar River Road/Case Hill Road
- Lincoln Heights
- Nelmar Heights
- East Green Mountain Road

These areas are currently served by Consolidated Communications' direct-buried copper facilities. The purpose of this project is to replace and upgrade that existing copper network by installing communication conduit, as shown on the attached plans, for new Fidium fiber-optic facilities. Consolidated's existing copper facilities will eventually be decommissioned as customers are transitioned to fiber.

This is not a request to introduce a new utility provider or establish an entirely new utility corridor. Consolidated already provides service within these areas, and the proposed conduit routes connect to existing utility poles, communication pedestals, and other existing Consolidated facilities. The conduit is being installed to modernize and replace the existing direct-buried communication infrastructure.

This request requires the requestor to apply for a conduit license, akin to a pole license, through the City. This is a standard municipal process, and the City Manager needs Council authorization to sign the license agreement.

Attached is a motion granting the City Manager said authorization, a copy of the proposed plans, and a copy of the proposed license agreements for Council's consideration.

Motion to Approve License for Underground Conduit in City Right-of-Way

The Claremont City Council hereby authorizes the City Manager, or her designees, enter into a License Agreement with Fidium Fiber for non-exclusive use of a designated portion of the City's public right-of-way across and beneath sidewalks and paved and unpaved portions of roadway Sugar River Road/Case Hill Road, Lincoln Heights, Nelmar Heights, East Green Mountain Road for the installation of fiber optic cabling. These licenses shall be effective only upon receipt by Fidium Fiber of all permits and approvals as may be required, including approval as to location by the City's Director of Public Works, and in compliance with all applicable codes and regulations. Fidium Fiber shall be responsible for all costs incurred by the City related to construction and maintenance of the facilities placed in and under City-owned property, including but not limited to restoring City-owned property to its preconstruction condition. The City Council further authorizes the City Manager, or her designees, to undertake all actions and to execute all documents as may be required to implement this motion.

AYES	_____	ABSENT	_____
NAYS	_____	ABSTAIN	_____

CERTIFICATION

I, Julia A. Bizzarro, the undersigned officer, hereby certify that the foregoing Motion was adopted by the City Council of the City of Claremont, New Hampshire, at a meeting, duly noticed, and held on Wednesday, September 9, 2026.

_____

Julia A. Bizzarro, Clerk to the Council

MIRRA
ESTABLISHED 1953
fidium
Proposed 710' (1) 1.25" SDR11 conduit from utility pole 31/15-5 to utility pole NT on Case Hill Rd
Sugar River Dr
Sugar River Dr
Sugar River Dr
Sugar River Dr
Sugar River Dr
Case Hill Rd
Case Hill Rd
Case Hill Rd
Google Maps
Rivards Repairs

Consolidated communications

PROPOSED CONDUIT INSTALLATION
AT
E GREEN MOUNTAIN RD
CLAREMONT, NH

LOCUS
N.T.S

INDEX OF DRAWING

SHEET NO.	DESCRIPTION
–	COVER SHEET
01	PROPOSED CONDUIT INSTALLATION 1
02	PROPOSED CONDUIT INSTALLATION 2
03	PROPOSED CONDUIT INSTALLATION 3
04	PROPOSED CONDUIT INSTALLATION 4
05	PROPOSED CONDUIT INSTALLATION 5
06	GENERAL NOTES AND DETAILS

AXIS
ENGINEERING GROUP
40 Winter St, Suite 320
Rochester, NH 03867
603-403-1511
www.axisegroup.com

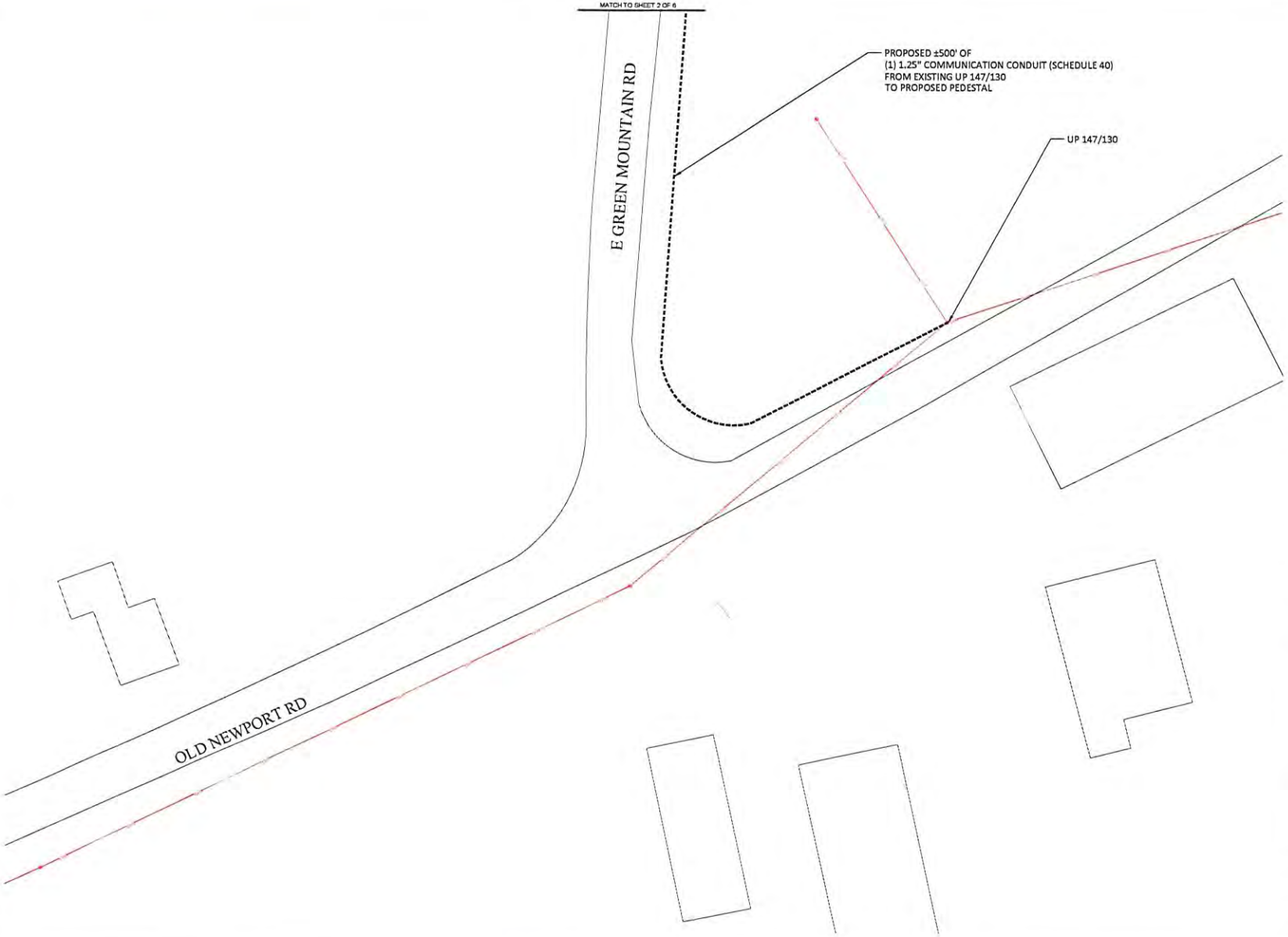

LEGEND

	ELECTRIC POLE		STREET LIGHT
	JOINT UTILITY POLE		ELECTRIC HH
	LAMP POST		TEL HH
	TRAFFIC LIGHT		CATV HH
	SEWER MH		COMM PEDESTAL
	DRAIN MH		IRRIGATION VALVE
	TELEPHONE MH		WATER METER
	ELECTRIC MH		GAS METER
	CATV MH		SEWER GATE
	WATER MH		GAS GATE
	PAD		WATER GATE
	BUSH/SHRUB		HYDRANT
	RIGHT OF WAY		MAIL BOX
	CULVERT		STONE BOUND
	GUARD RAIL		PARKING METER(S)
	FENCE		STEEL POST
	ELECTRIC VAULT		SIGN POLE
	TRAFFIC HH		UG CABLE MARKER
	PROPOSED HH		TRANSFORMER
	PROPOSED CONDUIT		CATCH BASIN

NOTE:
EXISTING UTILITIES SHOWN ARE APPROXIMATE AND NOT WARRANTED TO BE CORRECT. THE CONTRACTOR SHALL VERIFY THE LOCATION OF ALL PUBLIC AND PRIVATE UTILITIES PRIOR TO BEGINNING ANY EXCAVATION.

811 DigSafe.com
CALL BEFORE YOU DIG!
UNDERGROUND SERVICE ALERT
72 HOURS NOTICE REQUIRED.
CALL 1-888-DIG-SAFE

PREPARED BY:
AXIS ENGINEERING GROUP

PREPARED FOR:
Consolidated communications

REV #	DESCRIPTION	DATE

TITLE:
PROPOSED CONDUIT INSTALLATION 1
E GREEN MOUNTAIN RD
CLAREMONT, NH

DRAWN BY: MM	PRINT NO: 1 OF 6	PLAN DRAWN ON: D
CHECKED BY: MB	SCALE: 1" = 20'	36" X 24"
DATE: 5/28/2026		

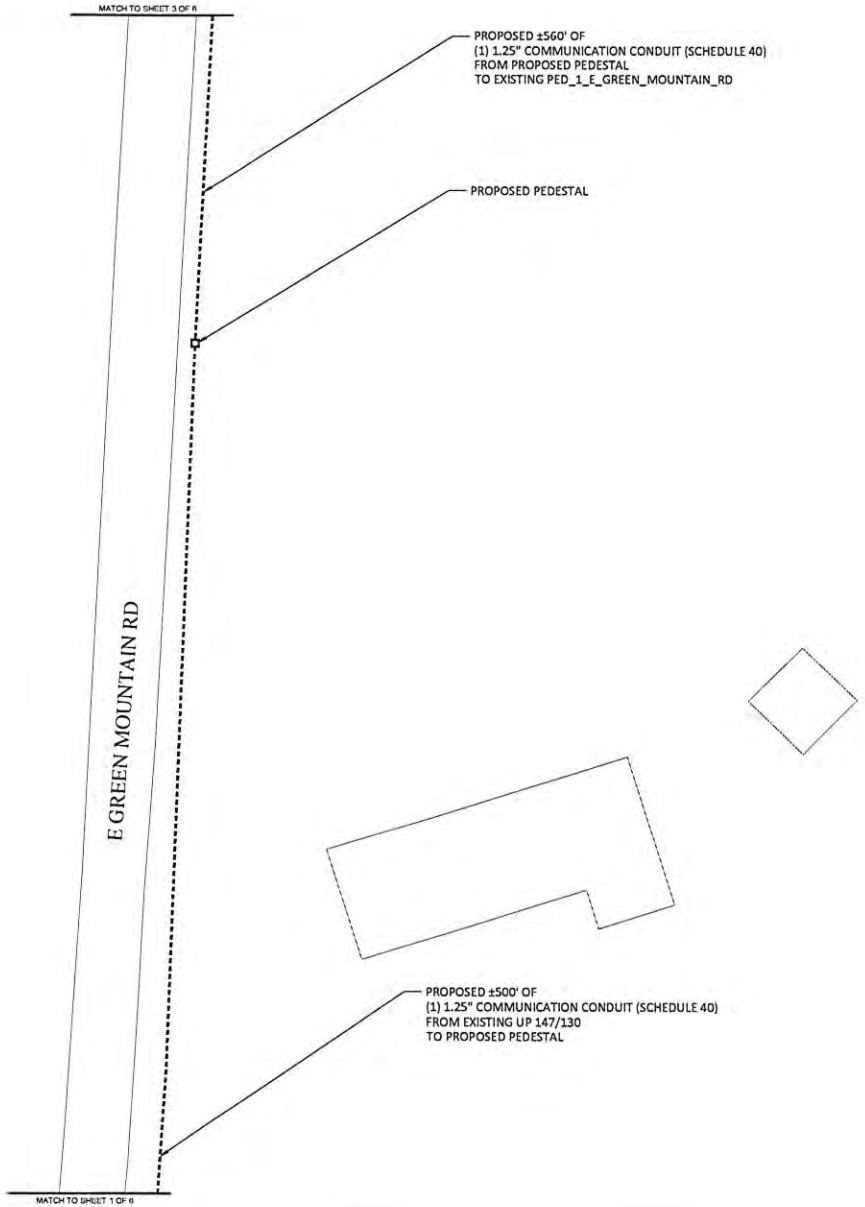

1" = 20 FEET

0 10 20 40 60

LEGEND

	ELECTRIC POLE		STREET LIGHT
	JOINT UTILITY POLE		ELECTRIC HH
	LAMP POST		TEL HH
	TRAFFIC LIGHT		CATV HH
	SEWER MH		COMM PEDESTAL
	DRAIN MH		IRRIGATION VALVE
	TELEPHONE MH		WATER METER
	ELECTRIC MH		GAS METER
	CATV MH		SEWER GATE
	WATER MH		GAS GATE
	PAD		WATER GATE
	BUSH/SHRUB		HYDRANT
	RIGHT OF WAY		MAIL BOX
	CULVERT		STONE BOUND
	GUARD RAIL		PARKING METER(S)
	FENCE		STEEL POST
	ELECTRIC VAULT		SIGN POLE
	TRAFFIC HH		UG CABLE MARKER
	PROPOSED HH		TRANSFORMER
	PROPOSED CONDUIT		CATCH BASIN

NOTE:
EXISTING UTILITIES SHOWN ARE APPROXIMATE AND NOT WARRANTED TO BE CORRECT. THE CONTRACTOR SHALL VERIFY THE LOCATION OF ALL PUBLIC AND PRIVATE UTILITIES PRIOR TO BEGINNING ANY EXCAVATION.

811 DigSafe.com

CALL BEFORE YOU DIG!
UNDERGROUND SERVICE ALERT
72 HOURS NOTICE REQUIRED.
CALL 1-888-DIG-SAFE

PREPARED BY
AXIS ENGINEERING GROUP

PREPARED FOR
Consolidated communications

REV #	DESCRIPTION	DATE

TITLE:
PROPOSED CONDUIT INSTALLATION 2
E GREEN MOUNTAIN RD
CLAREMONT, NH

DRAWN BY: MM	PRINT NO. 2 OF 6	PLAN DRAWN ON: D (36" X 24")
CHECKED BY: MB	SCALE: 1" = 20'	
DATE: 5/28/2026		

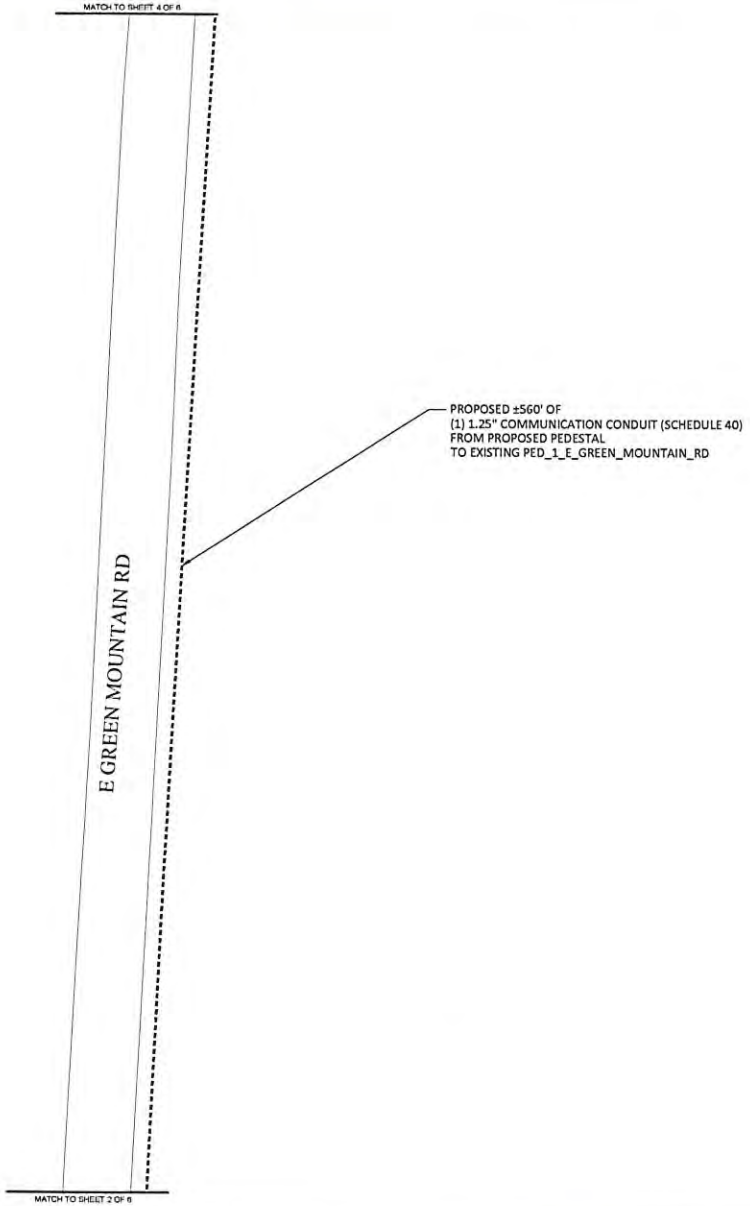

LEGEND

ELECTRIC POLE		STREET LIGHT	
JOINT UTILITY POLE		ELECTRIC HH	
LAMP POST		TEL HH	
TRAFFIC LIGHT		CATV HH	
SEWER MH		COMM PEDESTAL	
DRAIN MH		IRRIGATION VALVE	
TELEPHONE MH		WATER METER	
ELECTRIC MH		GAS METER	
CATV MH		SEWER GATE	
WATER MH		GAS GATE	
PAD		WATER GATE	
BUSH/SHRUB		HYDRANT	
RIGHT OF WAY		MAIL BOX	
CULVERT		STONE BOUND	
GUARD RAIL		PARKING METER(S)	
FENCE		STEEL POST	
ELECTRIC VAULT		SIGN POLE	
TRAFFIC HH		UG CABLE MARKER	
PROPOSED HH		TRANSFORMER	
PROPOSED CONDUIT		CATCH BASIN	

NOTE:
EXISTING UTILITIES SHOWN ARE APPROXIMATE AND NOT WARRANTED TO BE CORRECT. THE CONTRACTOR SHALL VERIFY THE LOCATION OF ALL PUBLIC AND PRIVATE UTILITIES PRIOR TO BEGINNING ANY EXCAVATION.

811 DigSafe.com
CALL BEFORE YOU DIG!
UNDERGROUND SERVICE ALERT
72 HOURS NOTICE REQUIRED.
CALL 1-888-DIG-SAFE

PREPARED BY:
AXIS ENGINEERING GROUP

PREPARED FOR:
Consolidated communications

REV #	DESCRIPTION	DATE

TITLE:
PROPOSED CONDUIT INSTALLATION 3
E GREEN MOUNTAIN RD
CLAREMONT, NH

DRAWN BY: MM	PRINT NO: 3 OF 6	PLAN DRAWN ON: D 36" X 24"
CHECKED BY: MB	SCALE: 1" = 20'	
DATE: 5/28/2026		

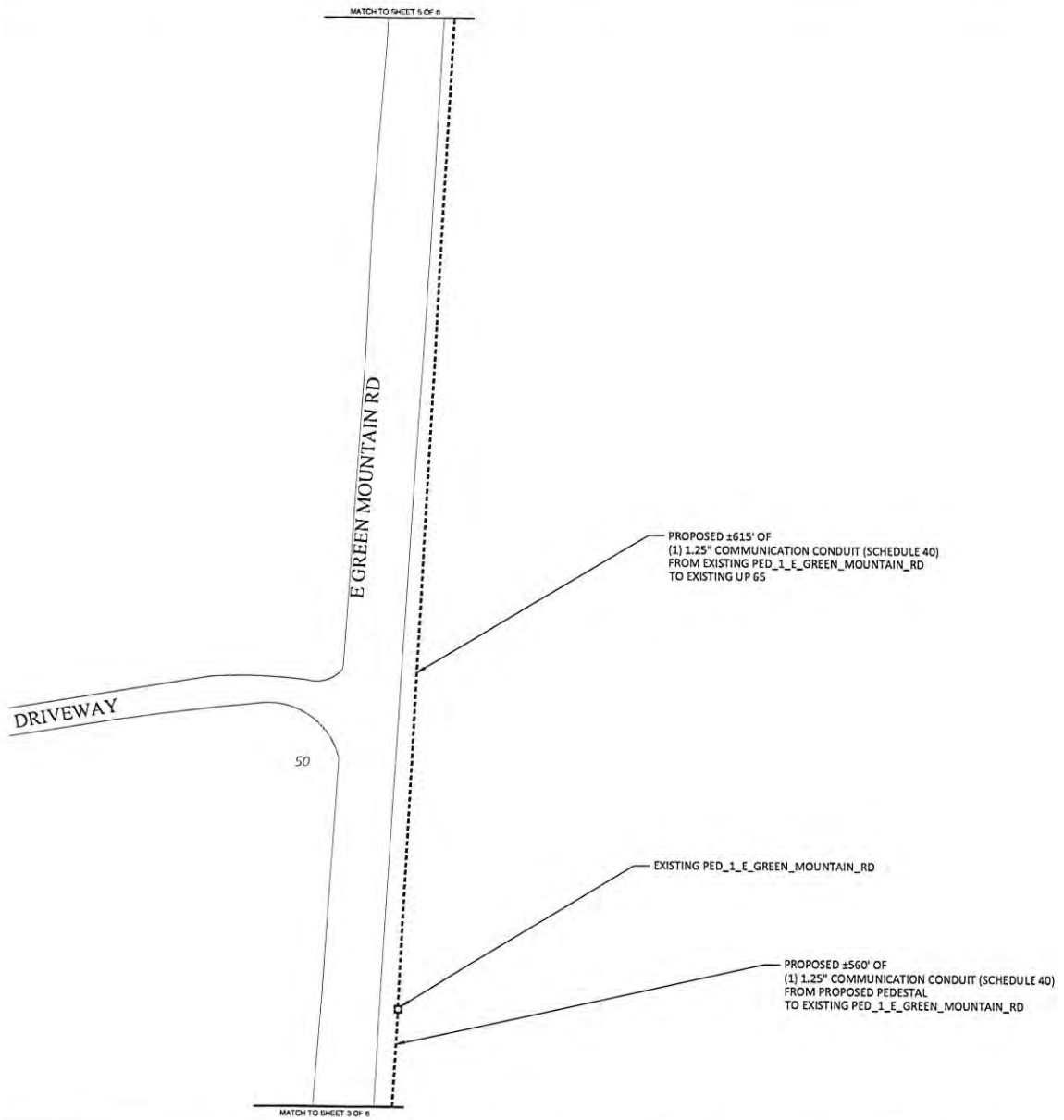

LEGEND

	ELECTRIC POLE		STREET LIGHT
	JOINT UTILITY POLE		ELECTRIC MH
	LAMP POST		TEL MH
	TRAFFIC LIGHT		CATV MH
	SEWER MH		COMM PEDESTAL
	DRAIN MH		IRRIGATION VALVE
	TELEPHONE MH		WATER METER
	ELECTRIC MH		GAS METER
	CATV MH		SEWER GATE
	WATER MH		GAS GATE
	PAD		WATER GATE
	BUSH/SHRUB		HYDRANT
	RIGHT OF WAY		MAIL BOX
	CULVERT		STONE BOUND
	GUARD RAIL		PARKING METER(S)
	FENCE		STEEL POST
	ELECTRIC VAULT		SIGN POLE
	TRAFFIC MH		UG CABLE MARKER
	PROPOSED MH		TRANSFORMER
	PROPOSED CONDUIT		CATCH BASIN

NOTE:
EXISTING UTILITIES SHOWN ARE APPROXIMATE AND NOT WARRANTED TO BE CORRECT. THE CONTRACTOR SHALL VERIFY THE LOCATION OF ALL PUBLIC AND PRIVATE UTILITIES PRIOR TO BEGINNING ANY EXCAVATION.

811 DigSafe.com
CALL BEFORE YOU DIG!
UNDERGROUND SERVICE ALERT
72 HOURS NOTICE REQUIRED.
CALL 1-888-DIG-SAFE

PREPARED BY:
AXIS ENGINEERING GROUP

PREPARED FOR:
Consolidated communications

REV #	DESCRIPTION	DATE

TITLE:
PROPOSED CONDUIT INSTALLATION 4
E GREEN MOUNTAIN RD
CLAREMONT, NH

DRAWN BY: MM	PRINT NO: 4 OF 6	PLAN DRAWN ON: D (36" X 24")
CHECKED BY: MR	SCALE: 1" = 20'	
DATE: 1/28/2026		

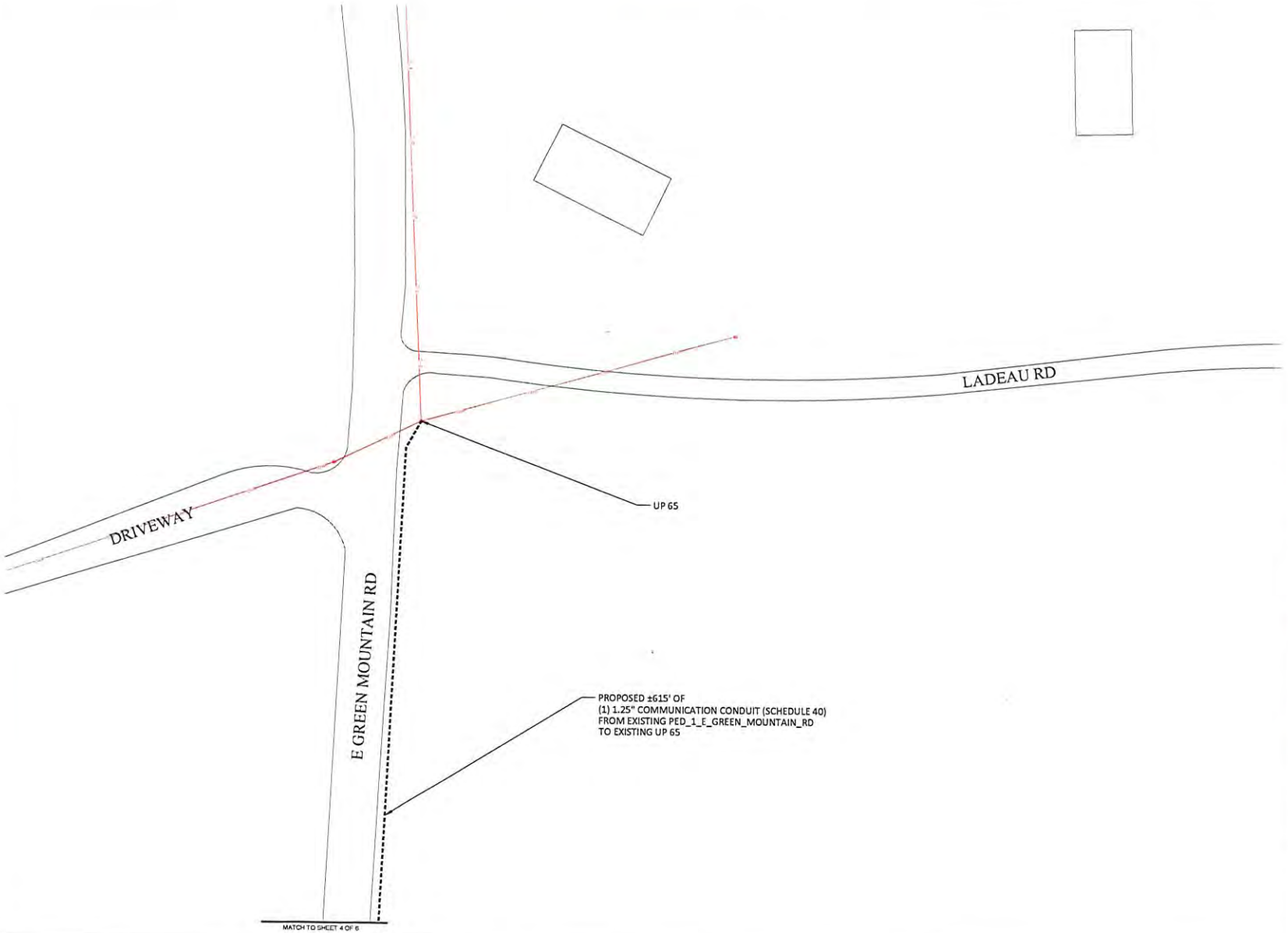

1"= 20 FEET

0 10 20 40 60

LEGEND

	ELECTRIC POLE		STREET LIGHT
	JOINT UTILITY POLE		ELECTRIC HH
	LAMP POST		TEL HH
	TRAFFIC LIGHT		CATV HH
	SEWER MH		COMM PEDESTAL
	DRAIN MH		IRRIGATION VALVE
	TELEPHONE MH		WATER METER
	ELECTRIC MH		GAS METER
	CATV MH		SEWER GATE
	WATER MH		GAS GATE
	PAD		WATER GATE
	BUSH/SHRUB		HYDRANT
	RIGHT OF WAY		MAIL BOX
	CULVERT		STONE BOUND
	GUARD RAIL		PARKING METER(S)
	FENCE		STEEL POST
	ELECTRIC VAULT		SIGN POLE
	TRAFFIC HH		UG CABLE MARKER
	PROPOSED HH		TRANSFORMER
	PROPOSED CONDUIT		CATCH BASIN

NOTE:
EXISTING UTILITIES SHOWN ARE APPROXIMATE AND NOT WARRANTED TO BE CORRECT. THE CONTRACTOR SHALL VERIFY THE LOCATION OF ALL PUBLIC AND PRIVATE UTILITIES PRIOR TO BEGINNING ANY EXCAVATION.

811 DigSafe.com

CALL BEFORE YOU DIG!
UNDERGROUND SERVICE ALERT
72 HOURS NOTICE REQUIRED.
CALL 1-888-DIG-SAFE

PREPARED BY:
AXIS ENGINEERING GROUP

PREPARED FOR:
Consolidated communications

REV #	DESCRIPTION	DATE

TITLE:
PROPOSED CONDUIT INSTALLATION 5
E GREEN MOUNTAIN RD
CLAREMONT, NH

DRAWN BY: MM	PRINT NO: 5 OF 6	PLAN DRAWN ON: D (36" X 24")
CHECKED BY: MB	SCALE: 1" = 20'	
DATE: 9/28/2026		

GENERAL NOTES

1. THE LOCATIONS OF EXISTING UNDERGROUND UTILITIES ARE SHOWN IN AN APPROXIMATE WAY ONLY AND HAVE NOT BEEN INDEPENDENTLY VERIFIED BY THE OWNER OR ITS REPRESENTATIVE. THE CONTRACTOR SHALL DETERMINE THE EXACT LOCATION OF ALL EXISTING UTILITIES BEFORE COMMENCING WORK, AND SHALL BE FULLY RESPONSIBLE FOR ANY AND ALL DAMAGES WHICH MIGHT BE OCCASIONED BY THE CONTRACTOR'S FAILURE TO EXACTLY LOCATE AND PRESERVE ANY AND ALL UNDERGROUND UTILITIES.

2. WHERE AN EXISTING UTILITY IS FOUND TO CONFLICT WITH THE PROPOSED WORK, THE LOCATION, ELEVATION AND SIZE OF THE UTILITY SHALL BE ACCURATELY DETERMINED WITHOUT DELAY BY THE CONTRACTOR, AND THE INFORMATION FURNISHED TO THE ENGINEER FOR RESOLUTION OF THE CONFLICT.

3. THE CONTRACTOR SHOULD MAINTAIN A SEPARATION OF 18 INCHES MIN. WHEN CROSSING EXISTING WATER, SEWER, OR DRAIN FACILITIES.

4. THE CONTRACTOR SHALL MAKE ALL ARRANGEMENTS FOR THE ALTERATION AND ADJUSTMENT OF GAS, ELECTRIC, TELEPHONE AND ANY OTHER PRIVATE UTILITIES BY THE UTILITY COMPANY.

5. THE CONTRACTOR SHALL NOT DISTURB PUBLIC TREES AND SHRUBS.

6. AREAS OUTSIDE THE LIMITS OF PROPOSED WORK DISTURBED BY THE CONTRACTOR'S OPERATIONS SHALL BE RESTORED BY THE CONTRACTOR TO THEIR ORIGINAL CONDITION AT NO EXPENSE TO THE OWNER.

7. THE CONTRACTOR SHALL BE RESPONSIBLE FOR PLACING AND MAINTAINING TEMPORARY RESURFACING AND/OR PLATING FOR ALL EXCAVATIONS IN PAVED STREETS AND SIDEWALKS UNTIL PERMANENT RESURFACING IS COMPLETE.

8. JOINTS BETWEEN NEW BITUMINOUS CONCRETE ROADWAY PAVEMENT AND SAW CUT EXISTING PAVEMENT SHALL BE SEALED WITH BITUMEN AND BACK SANDED.

9. THE CONTRACTOR SHALL PROTECT AND SUPPORT ALL EXISTING UTILITY LINES THAT BECOME EXPOSED DUE TO EXCAVATION REQUIRED TO INSTALL THE PROPOSED CONDUIT.

10. THE CONTRACTOR SHALL REPLACE ALL DISTURBED TRAFFIC SIGNAL LOOP DETECTORS TO GOOD WORKING CONDITION AS REQUIRED BY THE LATEST STANDARDS OF THE MUNICIPAL TRAFFIC DEPARTMENT.

11. ALL EXISTING STATE, COUNTY, CITY, AND TOWN LOCATION LINES AND PRIVATE PROPERTY LINES HAVE BEEN ESTABLISHED FROM AVAILABLE INFORMATION AND THEIR EXACT LOCATION ARE NOT GUARANTEED.

12. THE CONTRACTOR SHALL REPLACE ALL PAVEMENT MARKINGS IN THEIR ENTIRETY THAT HAVE BEEN DAMAGED BY TRENCH EXCAVATION OR OPERATIONS OF THE CONTRACTOR WITH SIMILAR COLOR AND SIZE THERMOPLASTIC MARKINGS.

* - ITEM SHOWN ON UTILITY RECORDS, BUT NOT FOUND IN FIELD.

~ - ITEM FOUND IN FIELD, BUT NOT IN UTILITY RECORDS.

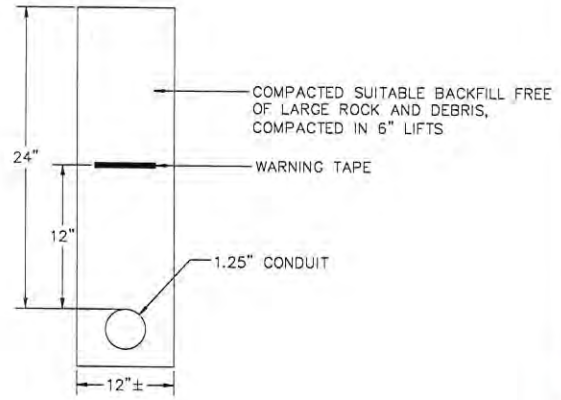

GRASS/DIRT TRENCH AND DUCT BANK INSTALLATION DETAIL

N.T.S.

TRENCH DETAIL NOTES:

1. 24" MAXIMUM FROM TOP OF CONDUIT TO SURFACE.
2. 12" FROM TOP OF CONDUIT TO METALLIC WARNING TAPE PLACED ABOVE.
3. REPAIR SIDEWALKS AND WALKWAYS WITH SAME MATERIALS AS EXISTING.

NOTE:
EXISTING UTILITIES SHOWN ARE APPROXIMATE AND NOT WARRANTED TO BE CORRECT. THE CONTRACTOR SHALL VERIFY THE LOCATION OF ALL PUBLIC AND PRIVATE UTILITIES PRIOR TO BEGINNING ANY EXCAVATION.

DigSafe.com
CALL BEFORE YOU DIG! UNDERGROUND SERVICE ALERT 72 HOURS NOTICE REQUIRED.
CALL 1-888-DIG-SAFE

PREPARED BY
AXIS ENGINEERING GROUP

PREPARED FOR
Consolidated communications

REV #	DESCRIPTION	DATE

TITLE
GENERAL NOTES AND DETAILS
E GREEN MOUNTAIN RD
CLAREMONT, NH

DRAWN BY: MM	PRINT NO: 6 OF 6	PLAN DRAWN ON: D 36" X 24"
CHECKED BY: MB	SCALE: N/A	
DATE: 5/28/2026		

LICENSE AGREEMENT

THIS LICENSE AGREEMENT is made as of the day of , 2026 (the "Effective Dates"), by and between the **City of Claremont** (hereinafter the "Grantor"), and **Consolidated Communications** (hereinafter the "Grantee"), a New Hampshire corporation, with a principal place of business at 64 Regional Dr. Concord, NH 03301

WITNESSETH:

WHEREAS Grantor is the owner or has control of a certain public right-of-way as laid out by the municipality and commonly known as E Green Mountain Road (hereinafter the "right-of-Way"); and

WHEREAS Grantee is requesting a License for the non-exclusive use beneath and across a designated portion of the Right-of-Way for the installation and operation of infrastructure related to communication and electric utility (hereinafter "Utility") lines (hereinafter the "Equipment") for Grantee's private use; and,

WHEREAS the Claremont City Council approved a License for such installation and operation in its municipal right-of-way and authorized the City Manager to enter into this Licesne Agreeement on_____, 2026.

NOW THEREFORE in consideration of the recitals and the mutual promises contained herein, which are hereby acknowledged, the above-referenced parties agree to the following terms and conditions:

1. Grantor hereby conditionally grants and conveys to Grantee a non-exclusive License to occupy and use a portion of the Right-of Way, both paved and unpaved as further detailed in a certain Site Plan, including all conditions related thereto, as approved by the Claremont Planning Board at its meeting on_____, and filed at the Sullivan County Registry of Deeds Drawer_____, Number_____.

2. This License is granted for the purpose of construction, installation, and maintenance of the Equipment related to and necessary for Grantee's utility operations.

3. Grantor shall provide Grantee with the right to reasonable use of the Right-of-Way to construct, repair, remove, replace, and maintain the Equipment contingent upon receipt by Grantee of all permits and approvals as may be required, including approval of safety plans and an Emergency Action Plan, by Grantor's Fire Department, approval as to location by Grantor's Director of Public Works, and compliance with all applicable codes and regulations.

4. Grantee shall provide Grantor with detailed "as built" drawings of the Equipment locations within the Right-of-Way as soon as is practicable upon the Equipment being operational, but in no event more than 30 days after the operational start-up. Any relocation within or modification of the Equipment in the Right-of-Way as shown on the Site Plan shall require approval by Grantor ***prior*** to any such relocation or modification. The ability of Grantee to

perform such activity shall be contingent upon Grantee providing notice to Grantor of any work to be performed at least 72 hours prior to any such work. Grantee's ability to perform such work shall also be contingent upon Grantor's lack of objection to said work upon receipt of notice. In the event of an emergency situation which requires Grantee's immediate attention to the Equipment, Grantee may perform any necessary work to address the situation; however, Grantee shall notify the Grantor of the circumstances which brought about the emergency situation and the work performed within 24 hours of completion of the work. Grantee shall provide Grantor with revised, detailed "as built" drawings of any relocation of the Equipment in the Right-of-Way upon completion of the work.

5. Upon prior notice to Grantor, Grantee may designate a third party to perform such installation, repair or maintenance work on Grantee's behalf and in Grantee's sole discretion.

6. Grantee's Equipment, as well as the operation, repair, maintenance and/or replacement of said Equipment, shall not interfere with Grantor's municipal operations. Grantee acknowledges that Grantee's use of the Right-of-Way is secondary to Grantor's use of the Right-of-Way. In the event the Grantee's use of the Right-of-Way in any manner interferes with Grantor's municipal operations, Grantor and Grantee shall work collaboratively to address this issue and to reach a mutual agreement as to how to address this interference. If Grantor and Grantee are unable to agree upon a solution to resolve the interference, Grantee shall immediately remove its Equipment causing said interference from the Right-of-Way.

7. Grantee shall provide Grantor proof of property and liability coverage, with limits no less than $1,000,000.00 per occurrence/$2,000,000.00 aggregate, indicating Grantor as a named additional insured. Said insurance shall include endorsements that coverage provided shall not be reduced or cancelled without thirty (30) days advance written notice to Grantor and , if cancellation is for non-payment of premium or other event for which coverage may be terminated on 10-days' notice to the Grantee, Grantee shall be given no less than 10-days' advance written notice. Grantee shall also maintain at its own expense all required insurance coverages related to its employees, contractors, and subcontractors.

8. Grantee will hold Grantor harmless of and from any, and all claims arising out of Grantee's use of the Right-of-Way. The foregoing notwithstanding, it is understood and agrees that this paragraph is not intended to relieve the Grantor from or indemnify the Grantor against any failure by Grantor to satisfy any obligations Grantor may have pursuant to state law, regulation, and local ordinance with respect to the municipal rights-of-way.

9. The License Agreement is personal to Grantee and will terminate automatically if transferred, assigned, or otherwise conveyed to any purchaser for value without the approval of the Claremont City Council, which shall not unreasonably be withheld. Notwithstanding the above, Grantee may assign this Agreement to a related party within Grantee's corporate structure, without consent but with advance written notice to Grantor, so long as the related party does not have a negative financial impact on Grantee.

10. Grantor reserves the right to act with regard to the Right-of- Way in all matters under color State, Federal, or local law or regulation as may be required in response to declared emergency, health, safety, or zoning concerns, code or other violations.

11. Grantee shall be responsible for all costs incurred by Grantor or Grantee related to the construction, repair, removal, replacement, and/or maintenance of the Equipment in the Right-of-Way, including by not limited to restoring Grantor's property to its preconstruction condition.

12. Grantee will be responsible for all applicable duly assessed personal and real estate taxes when due. Failure of Grantee to pay the duly assessed personal and real estate when due shall be cause to terminate said Agreement by the Grantor. Grantee consents to the payment of any duly assessed personal and/or real estate taxes for the use and occupation of the Grantor's property and public rights-of-way.

13. No modification, waiver, or amendment of this Agreement shall be valid unless the same is in writing and signed by the parties. The waiver of any breach of any of the terms and conditions of this Agreement by either party shall not be construed as a continuing waiver of any said terms and conditions or the right to enforce any prior or subsequent breach thereof. This Agreement shall be subject to the laws and the jurisdiction of the Courts of the State of New Hampshire.

IN WITNESS WHEREOF, the Grantor and Grantee have executed this Agreement as of the date first above written.

Grantor: **City of Claremont**

Signed:_____ Date:_____
Nancy L. Bates, City Manager

Grantee: **Consolidated Communications**

Signed: Faye M. Ng Date: 6-15-2021
Duly Authorized

Print Name: Faye M. Ng

Consolidated communications

PROPOSED CONDUIT INSTALLATION
AT
NELMAR HEIGHTS,
CLAREMONT, NH

LOCUS
N.T.S

INDEX OF DRAWING

SHEET NO.	DESCRIPTION
–	COVER SHEET
01	PROPOSED CONDUIT INSTALLATION 01
02	PROPOSED CONDUIT INSTALLATION 02
03	PROPOSED CONDUIT INSTALLATION 03
04	PROPOSED CONDUIT INSTALLATION 04
05	PROPOSED CONDUIT INSTALLATION 05
06	PROPOSED CONDUIT INSTALLATION 06
07	PROPOSED CONDUIT INSTALLATION 07
08	DETAILS

AXIS
ENGINEERING GROUP
40 Winter St, Suite 320
Rochester, NH 03867
603-403-1511
www.axisegroup.com

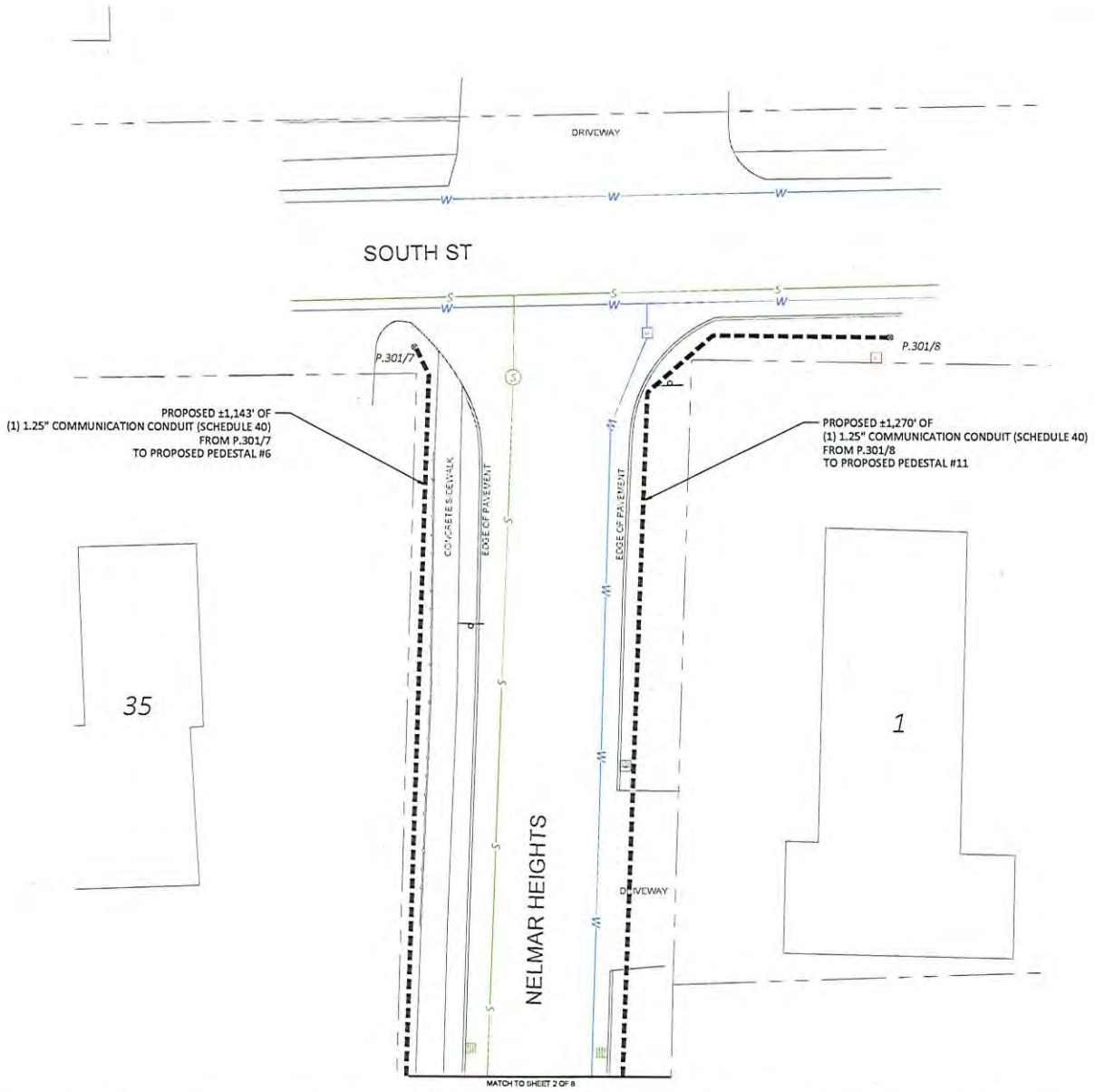

LEGEND

×	ELECTRIC POLE		STREET LIGHT
⊗	JOINT UTILITY POLE	E	ELECTRIC MH
○	LAMP POST	T	TEL MH
	TRAFFIC LIGHT	C	CATV MH
S	SEWER MH		COMM PEDESTAL
D	DRAIN MH		IRRIGATION VALVE
T	TELEPHONE MH		WATER METER
E	ELECTRIC MH		GAS METER
C	CATV MH		SEWER GATE
W	WATER MH		GAS GATE
	PAD		WATER GATE
	BUSH/SHRUB		HYDRANT
	RIGHT OF WAY		MAIL BOX
	CULVERT		STONE BOUND
	GUARD RAIL		PARKING METER(S)
	FENCE		STEEL POST
	ELECTRIC VAULT		SIGN POLE
	TRAFFIC MH		UG CABLE MARKER
	PROPOSED HH		TRANSFORMER
	PROPOSED CONDUIT		CATCH BASIN

NOTE:
EXISTING UTILITIES SHOWN ARE APPROXIMATE AND NOT WARRANTED TO BE CORRECT. THE CONTRACTOR SHALL VERIFY THE LOCATION OF ALL PUBLIC AND PRIVATE UTILITIES PRIOR TO BEGINNING ANY EXCAVATION.

811 DigSafe.com
CALL BEFORE YOU DIG!
UNDERGROUND SERVICE ALERT
72 HOURS NOTICE REQUIRED.
CALL 1-888-DIG-SAFE

PREPARED BY:
AXIS ENGINEERING GROUP

PREPARED FOR:
Consolidated communications

REV #	DESCRIPTION	DATE

TITLE:
PROPOSED CONDUIT INSTALLATION 01
NELMAR HEIGHTS,
CLAREMONT, NH

DRAWN BY: EE	PRINT NO: 1 OF 8	PLAN DRAWN ON: D (36" X 24")
CHECKED BY: MB	SCALE: 1" = 5'	
DATE: 09/28/26		

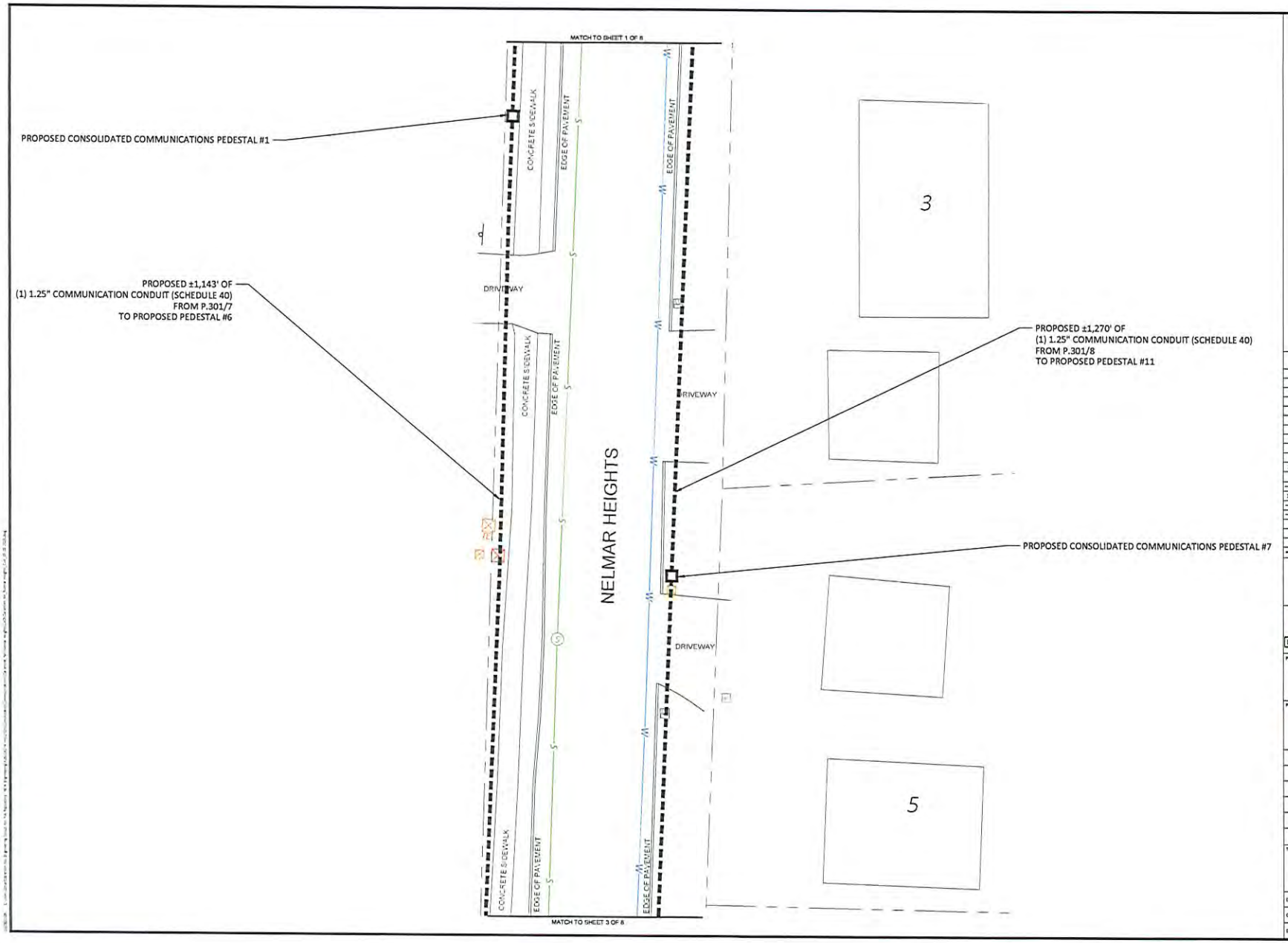

LEGEND

ELECTRIC POLE		STREET LIGHT	
JOINT UTILITY POLE		ELECTRIC MH	
LAMP POST		TEL MH	
TRAFFIC LIGHT		CATV MH	
SEWER MH		COMM PEDESTAL	
DRAIN MH		IRRIGATION VALVE	
TELEPHONE MH		WATER METER	
ELECTRIC MH		GAS METER	
CATV MH		SEWER GATE	
WATER MH		GAS GATE	
PAD		WATER GATE	
BUSH/SHRUB		HYDRANT	
RIGHT OF WAY		MAIL BOX	
CULVERT		STONE BOUND	
GUARD RAIL		PARKING METER(S)	
FENCE		STEEL POST	
ELECTRIC VAULT		SIGN POLE	
TRAFFIC MH		UG CABLE MARKER	
PROPOSED MH		TRANSFORMER	
PROPOSED CONDUIT		CATCH BASIN	

NOTE:
EXISTING UTILITIES SHOWN ARE APPROXIMATE AND NOT WARRANTED TO BE CORRECT. THE CONTRACTOR SHALL VERIFY THE LOCATION OF ALL PUBLIC AND PRIVATE UTILITIES PRIOR TO BEGINNING ANY EXCAVATION.

811 DigSafe.com
CALL BEFORE YOU DIG!
UNDERGROUND SERVICE ALERT
72 HOURS NOTICE REQUIRED.
CALL 1-888-DIG-SAFE

PREPARED BY:
AXIS ENGINEERING GROUP

PREPARED FOR:
Consolidated communications

REV #	DESCRIPTION	DATE

TITLE:
PROPOSED CONDUIT INSTALLATION 02
NELMAR HEIGHTS,
CLAREMONT, NH

DRAWN BY: EE	PRINT NO: 2 OF 8	PLAN DRAWN ON: D (36" x 24")
CHECKED BY: MB	SCALE: 1" = 5'	
DATE: 05/28/24		

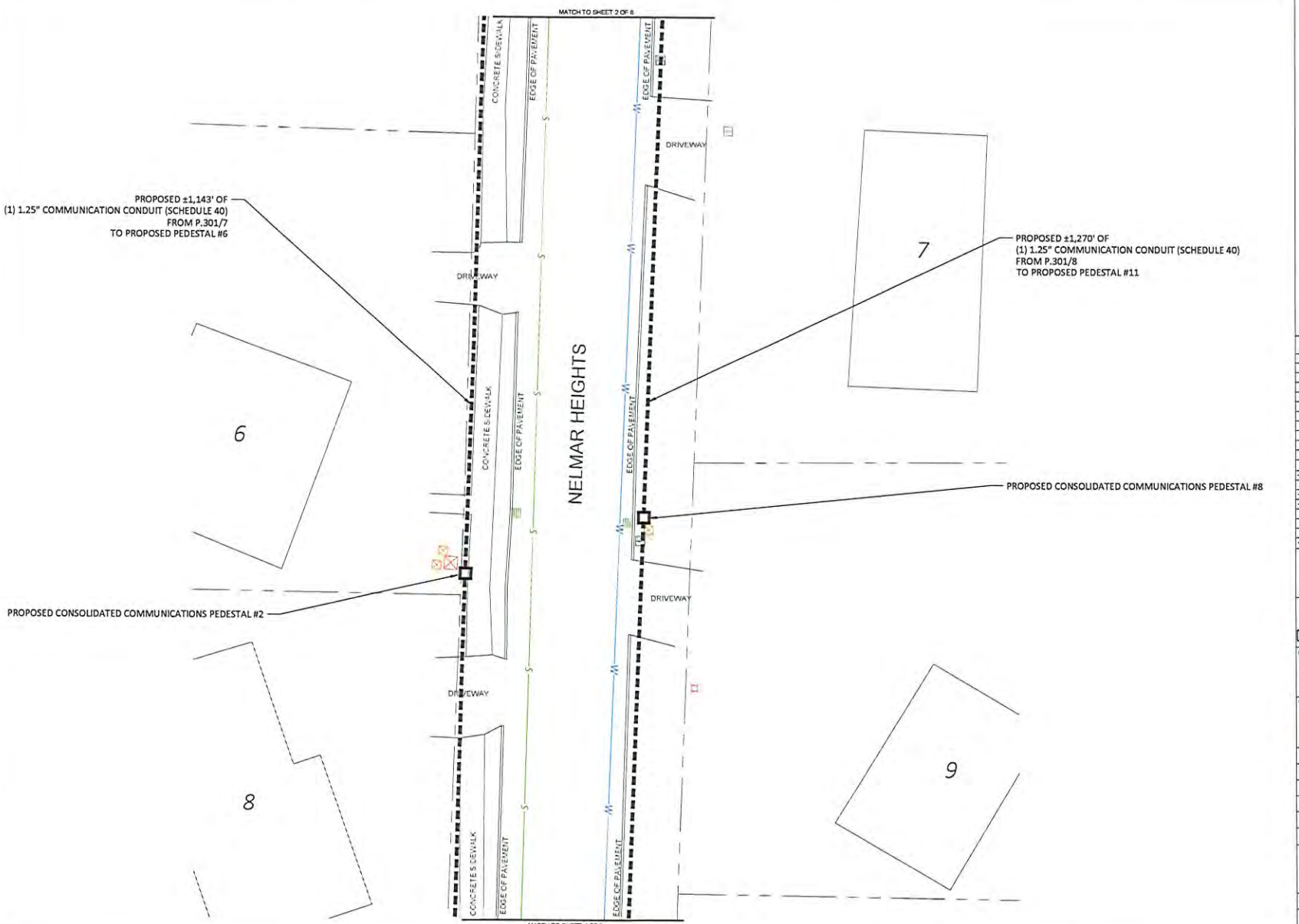

LEGEND

	ELECTRIC POLE		STREET LIGHT
	JOINT UTILITY POLE		ELECTRIC HH
	LAMP POST		TEL HH
	TRAFFIC LIGHT		CATV HH
	SEWER MH		COMM PEDESTAL
	DRAIN MH		IRRIGATION VALVE
	TELEPHONE MH		WATER METER
	ELECTRIC MH		GAS METER
	CATV MH		SEWER GATE
	WATER MH		GAS GATE
	PAD		WATER GATE
	BUSH/SHRUB		HYDRANT
	RIGHT OF WAY		MAIL BOX
	CULVERT		STONE BOUND
	GUARD RAIL		PARKING METER(S)
	FENCE		STEEL POST
	ELECTRIC VAULT		SIGN POLE
	TRAFFIC HH		UG CABLE MARKER
	PROPOSED HH		TRANSFORMER
	PROPOSED CONDUIT		CATCH BASIN

NOTE:
EXISTING UTILITIES SHOWN ARE APPROXIMATE AND NOT WARRANTED TO BE CORRECT. THE CONTRACTOR SHALL VERIFY THE LOCATION OF ALL PUBLIC AND PRIVATE UTILITIES PRIOR TO BEGINNING ANY EXCAVATION.

811 DigSafe.com
CALL BEFORE YOU DIG!
UNDERGROUND SERVICE ALERT
72 HOURS NOTICE REQUIRED.
CALL 1-888-DIG-SAFE

PREPARED BY:
AXIS ENGINEERING GROUP

PREPARED FOR:
Consolidated communications

REV #	DESCRIPTION	DATE

TITLE:
PROPOSED CONDUIT INSTALLATION 03
NELMAR HEIGHTS,
CLAREMONT, NH

DRAWN BY: EE	PRINT NO: 3 OF 8	PLAN DRAWN ON: D (36" X 24")
CHECKED BY: MB	SCALE: 1" = 5'	
DATE: 05/28/26		

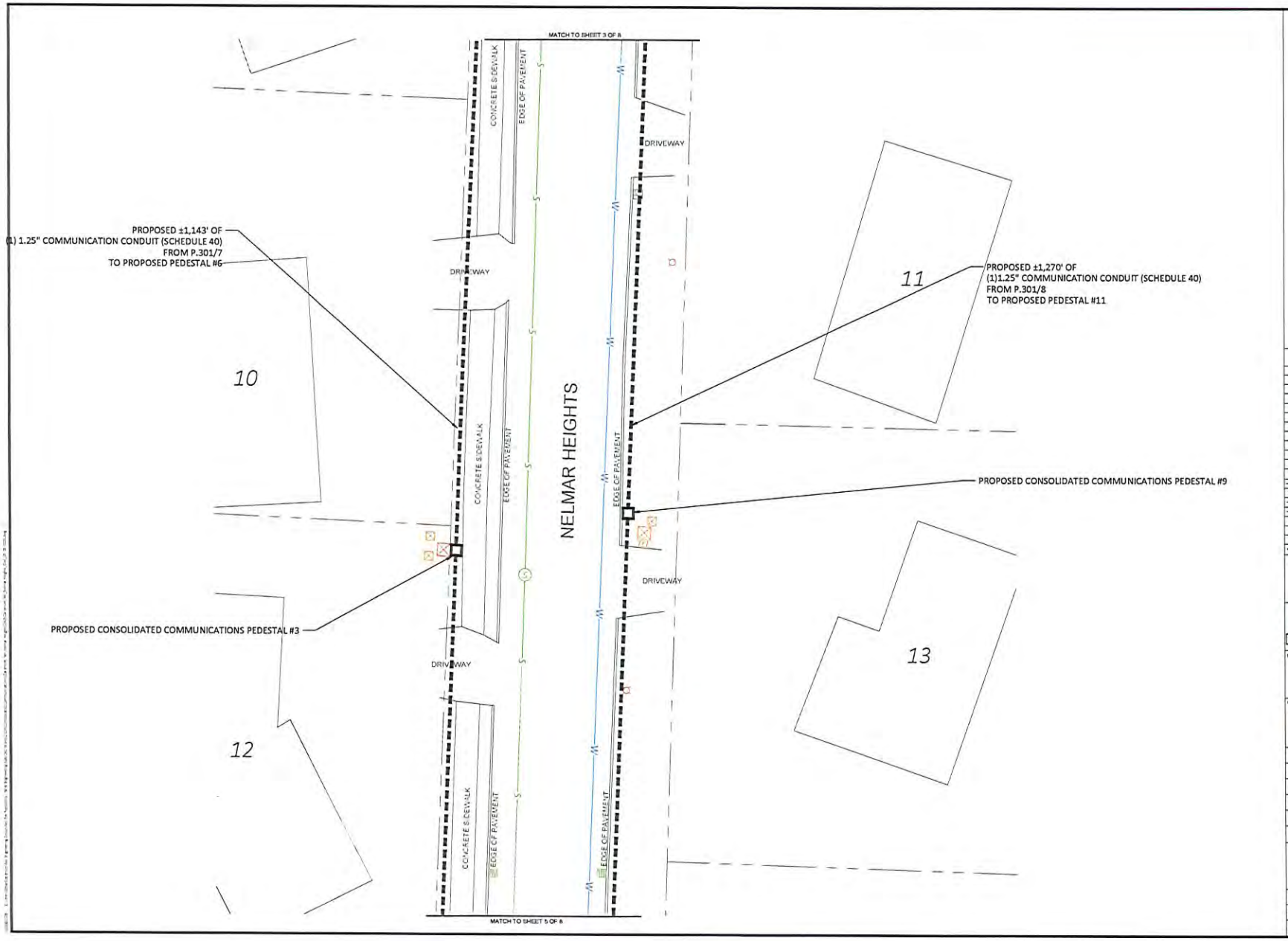

LEGEND

	ELECTRIC POLE		STREET LIGHT
	JOINT UTILITY POLE		ELECTRIC HH
	LAMP POST		TEL HH
	TRAFFIC LIGHT		CATV HH
	SEWER MH		COMM PEDESTAL
	DRAIN MH		IRRIGATION VALVE
	TELEPHONE MH		WATER METER
	ELECTRIC MH		GAS METER
	CATV MH		SEWER GATE
	WATER MH		GAS GATE
	PAD		WATER GATE
	BUSH/SHRUB		HYDRANT
	RIGHT OF WAY		MAIL BOX
	CULVERT		STONE BOUND
	GUARD RAIL		PARKING METER(S)
	FENCE		STEEL POST
	ELECTRIC VAULT		SIGN POLE
	TRAFFIC HH		UG CABLE MARKER
	PROPOSED HH		TRANSFORMER
	PROPOSED CONDUIT		CATCH BASIN

NOTE:
EXISTING UTILITIES SHOWN ARE APPROXIMATE AND NOT WARRANTED TO BE CORRECT. THE CONTRACTOR SHALL VERIFY THE LOCATION OF ALL PUBLIC AND PRIVATE UTILITIES PRIOR TO BEGINNING ANY EXCAVATION.

811 DigSafe.com
CALL BEFORE YOU DIG!
UNDERGROUND SERVICE ALERT
72 HOURS NOTICE REQUIRED.
CALL 1-888-DIG-SAFE

PREPARED BY:
AXIS ENGINEERING GROUP

PREPARED FOR:
Consolidated communications

REV #	DESCRIPTION	DATE

TITLE:
PROPOSED CONDUIT INSTALLATION 04
NELMAR HEIGHTS,
CLAREMONT, NH

DRAWN BY: EE	PRINT NO: 4 OF 8	PLAN DRAWN ON: D (36" X 24")
CHECKED BY: MB	SCALE: 1" = 5'	
DATE: 09/28/26		

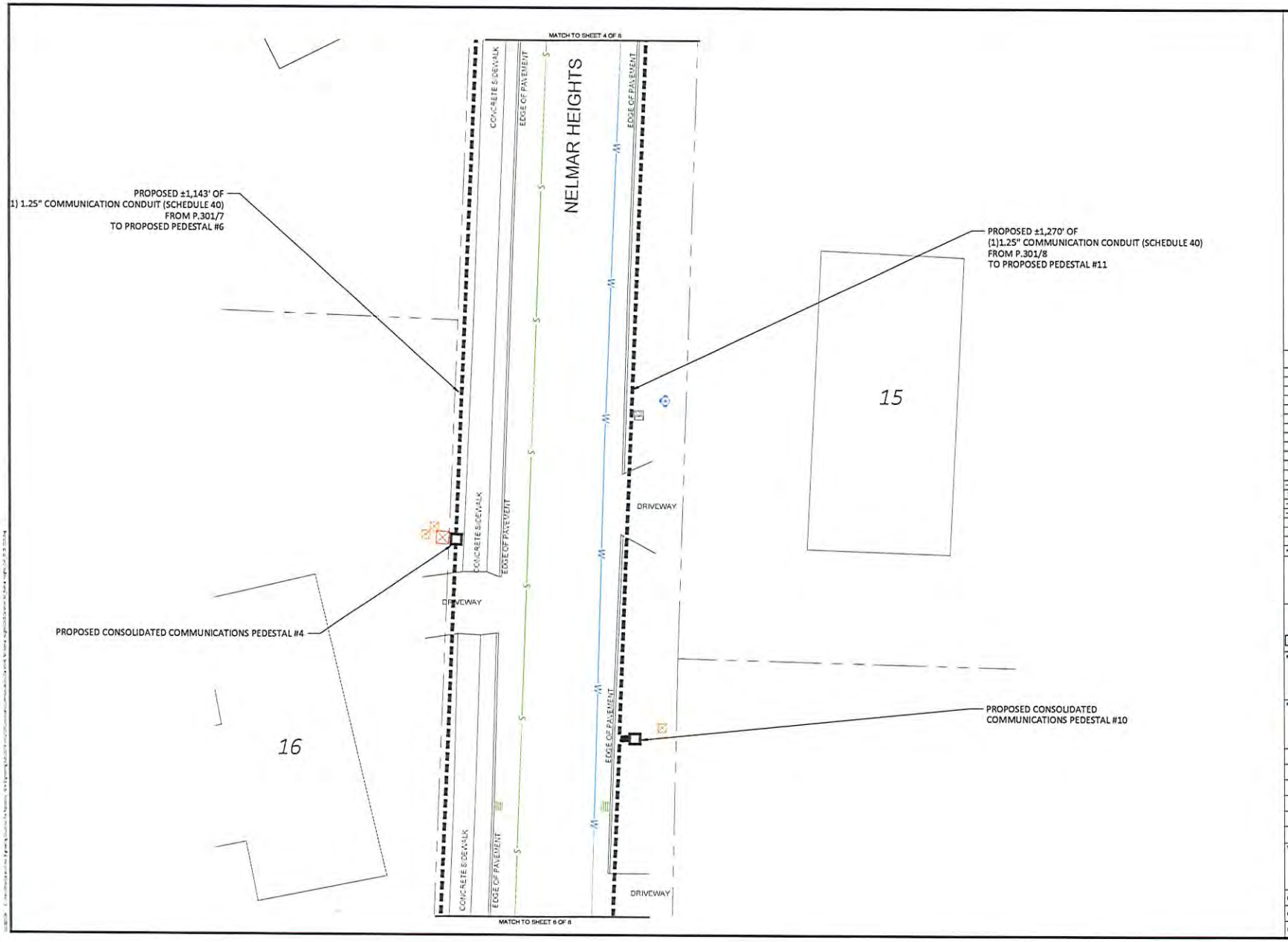

1" = 10 FEET

LEGEND

ELECTRIC POLE		STREET LIGHT	
JOINT UTILITY POLE		ELECTRIC HH	
LAMP POST		TEL HH	
TRAFFIC LIGHT		CATV HH	
SEWER MH		COMM PEDESTAL	
DRAIN MH		IRRIGATION VALVE	
TELEPHONE MH		WATER METER	
ELECTRIC MH		GAS METER	
CATV MH		SEWER GATE	
WATER MH		GAS GATE	
PAD		WATER GATE	
BUSH/SHRUB		HYDRANT	
RIGHT OF WAY		MAIL BOX	
CULVERT		STONE BOUND	
GUARD RAIL		PARKING METER(S)	
FENCE		STEEL POST	
ELECTRIC VAULT		SIGN POLE	
TRAFFIC HH		UG CABLE MARKER	
PROPOSED HH		TRANSFORMER	
PROPOSED CONDUIT		CATCH BASIN	

NOTE:
EXISTING UTILITIES SHOWN ARE APPROXIMATE AND NOT WARRANTED TO BE CORRECT. THE CONTRACTOR SHALL VERIFY THE LOCATION OF ALL PUBLIC AND PRIVATE UTILITIES PRIOR TO BEGINNING ANY EXCAVATION.

811 DigSafe.com
CALL BEFORE YOU DIG!
UNDERGROUND SERVICE ALERT
72 HOURS NOTICE REQUIRED.
CALL 1-888-DIG-SAFE

PREPARED BY:
AXIS ENGINEERING GROUP

PREPARED FOR:
Consolidated communications

REV #	DESCRIPTION	DATE

TITLE:
PROPOSED CONDUIT INSTALLATION 05
NELMAR HEIGHTS,
CLAREMONT, NH

DRAWN BY: EE	PRINT NO: 5 OF 8	PLAN DRAWN ON: D (36" X 24")
CHECKED BY: MB	SCALE: 1" = 5'	
DATE: 09/28/26		

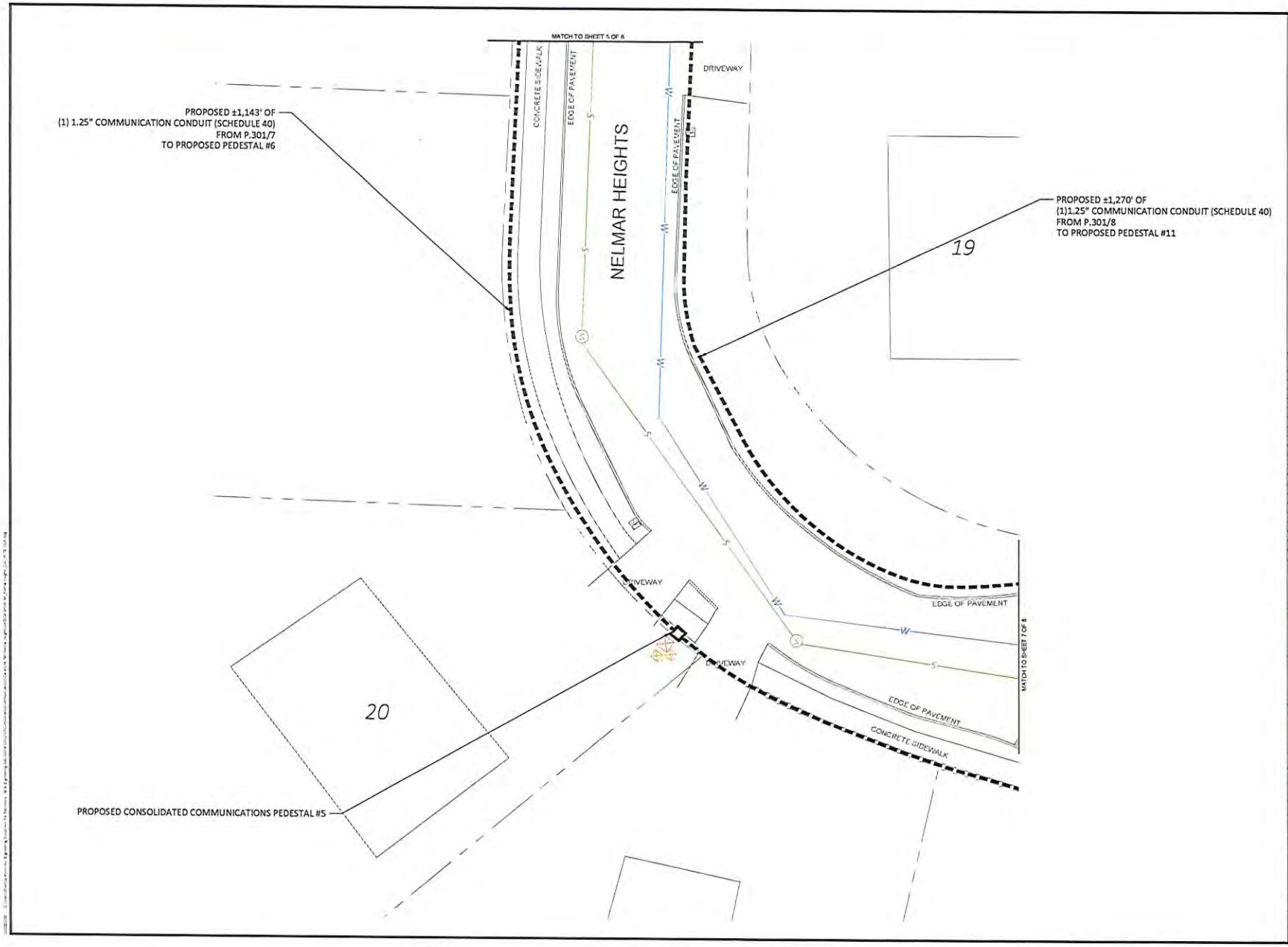

LEGEND

	ELECTRIC POLE		STREET LIGHT
	JOINT UTILITY POLE	E	ELECTRIC HH
	LAMP POST	T	TEL HH
	TRAFFIC LIGHT	C	CATV HH
S	SEWER MH		COMM PEDESTAL
D	DRAIN MH		IRRIGATION VALVE
T	TELEPHONE MH		WATER METER
E	ELECTRIC MH		GAS METER
C	CATV MH		SEWER GATE
W	WATER MH		GAS GATE
	PAD		WATER GATE
	BUSH/SHRUB		HYDRANT
	RIGHT OF WAY		MAIL BOX
	CULVERT		STONE BOUND
	GUARD RAIL		PARKING METER(S)
	FENCE		STEEL POST
	ELECTRIC VAULT		SIGN POLE
	TRAFFIC HH		UG CABLE MARKER
	PROPOSED HH		TRANSFORMER
	PROPOSED CONDUIT		CATCH BASIN

NOTE:
EXISTING UTILITIES SHOWN ARE APPROXIMATE AND NOT WARRANTED TO BE CORRECT. THE CONTRACTOR SHALL VERIFY THE LOCATION OF ALL PUBLIC AND PRIVATE UTILITIES PRIOR TO BEGINNING ANY EXCAVATION.

811 DigSafe.com
CALL BEFORE YOU DIG!
UNDERGROUND SERVICE ALERT
72 HOURS NOTICE REQUIRED.
CALL 1-888-DIG-SAFE

PREPARED BY:
AXIS ENGINEERING GROUP

PREPARED FOR:
Consolidated communications

REV #	DESCRIPTION	DATE

TITLE:
PROPOSED CONDUIT INSTALLATION 06
NELMAR HEIGHTS,
CLAREMONT, NH

DRAWN BY: EE	PRINT NO: 6 OF 8	PLAN DRAWN ON: D (36" x 24")
CHECKED BY: MB	SCALE: 1" = 5'	
DATE: 01/28/16		

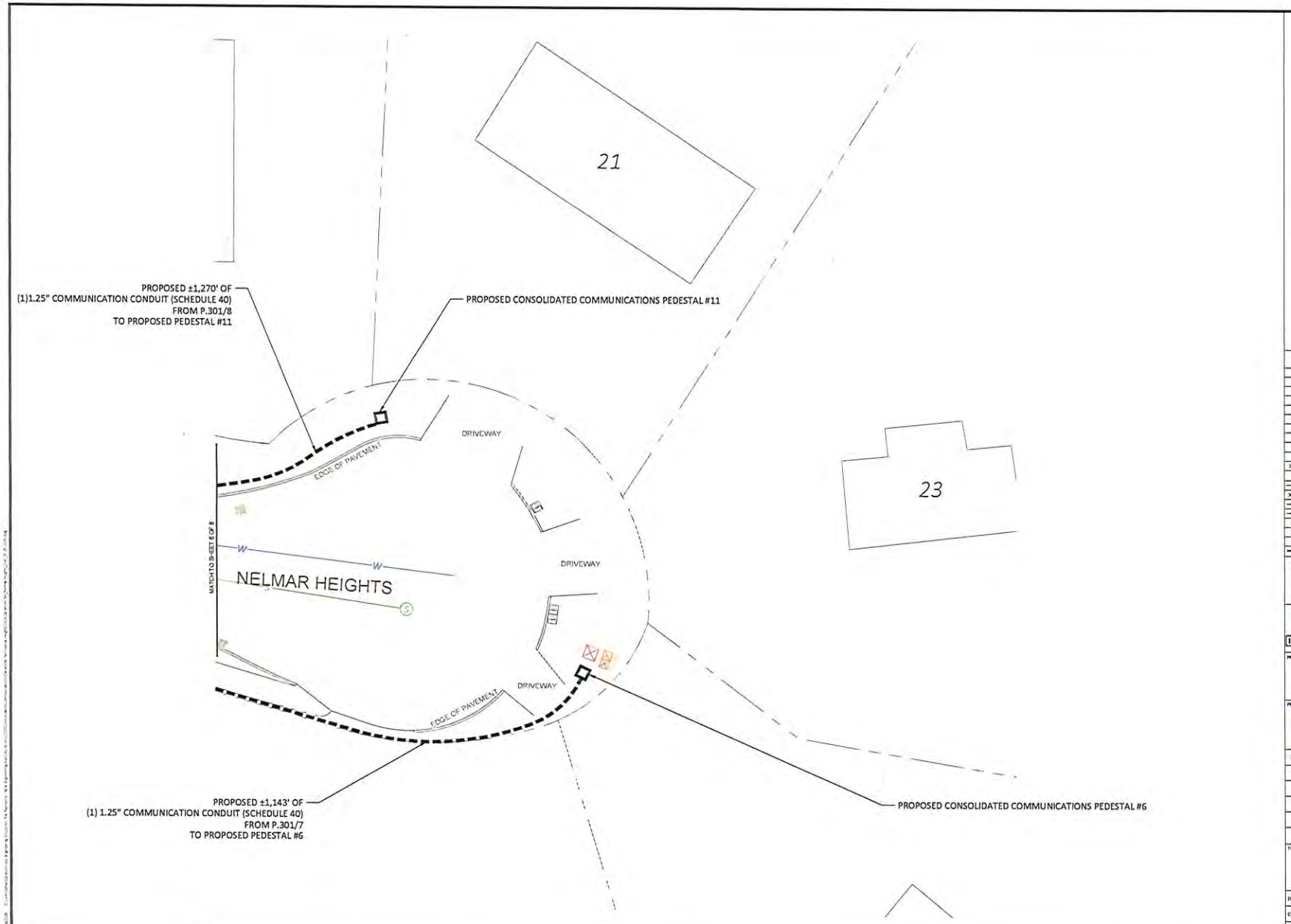

1" = 10 FEET

0 5 10 20 40

LEGEND

	ELECTRIC POLE		STREET LIGHT
	JOINT UTILITY POLE		ELECTRIC HH
	LAMP POST		TEL HH
	TRAFFIC LIGHT		CATV HH
	SEWER MH		COMM PEDESTAL
	DRAIN MH		IRRIGATION VALVE
	TELEPHONE MH		WATER METER
	ELECTRIC MH		GAS METER
	CATV MH		SEWER GATE
	WATER MH		GAS GATE
	PAD		WATER GATE
	BUSH/SHRUB		HYDRANT
	RIGHT OF WAY		MAIL BOX
	CULVERT		STONE BOUND
	GUARD RAIL		PARKING METER(S)
	FENCE		STEEL POST
	ELECTRIC VAULT		SIGN POLE
	TRAFFIC HH		UG CABLE MARKER
	PROPOSED HH		TRANSFORMER
	PROPOSED CONDUIT		CATCH BASIN

NOTE:
EXISTING UTILITIES SHOWN ARE APPROXIMATE AND NOT WARRANTED TO BE CORRECT. THE CONTRACTOR SHALL VERIFY THE LOCATION OF ALL PUBLIC AND PRIVATE UTILITIES PRIOR TO BEGINNING ANY EXCAVATION.

811 DigSafe.com
CALL BEFORE YOU DIG!
UNDERGROUND SERVICE ALERT
72 HOURS NOTICE REQUIRED.
CALL 1-888-DIG-SAFE

PREPARED BY:
AXIS ENGINEERING GROUP

PREPARED FOR:
Consolidated communications

REV #	DESCRIPTION	DATE

TITLE:
PROPOSED CONDUIT INSTALLATION 07
NELMAR HEIGHTS,
CLAREMONT, NH

DRAWN BY: EE	PRINT NO: 7 OF 8	PLAN DRAWN ON: D
CHECKED BY: MB	SCALE: 1" = 5'	36" X 24"
DATE: 09/28/26		

GENERAL NOTES

1. THE LOCATIONS OF EXISTING UNDERGROUND UTILITIES ARE SHOWN IN AN APPROXIMATE WAY ONLY AND HAVE NOT BEEN INDEPENDENTLY VERIFIED BY THE OWNER OR ITS REPRESENTATIVE. THE CONTRACTOR SHALL DETERMINE THE EXACT LOCATION OF ALL EXISTING UTILITIES BEFORE COMMENCING WORK, AND SHALL BE FULLY RESPONSIBLE FOR ANY AND ALL DAMAGES WHICH MIGHT BE OCCASIONED BY THE CONTRACTOR'S FAILURE TO EXACTLY LOCATE AND PRESERVE ANY AND ALL UNDERGROUND UTILITIES.

2. WHERE AN EXISTING UTILITY IS FOUND TO CONFLICT WITH THE PROPOSED WORK, THE LOCATION, ELEVATION AND SIZE OF THE UTILITY SHALL BE ACCURATELY DETERMINED WITHOUT DELAY BY THE CONTRACTOR, AND THE INFORMATION FURNISHED TO THE ENGINEER FOR RESOLUTION OF THE CONFLICT.

3. THE CONTRACTOR SHOULD MAINTAIN A SEPARATION OF 18 INCHES MIN. WHEN CROSSING EXISTING WATER, SEWER, OR DRAIN FACILITIES.

4. THE CONTRACTOR SHALL MAKE ALL ARRANGEMENTS FOR THE ALTERATION AND ADJUSTMENT OF GAS, ELECTRIC, TELEPHONE AND ANY OTHER PRIVATE UTILITIES BY THE UTILITY COMPANY.

5. THE CONTRACTOR SHALL NOT DISTURB PUBLIC TREES AND SHRUBS.

6. AREAS OUTSIDE THE LIMITS OF PROPOSED WORK DISTURBED BY THE CONTRACTOR'S OPERATIONS SHALL BE RESTORED BY THE CONTRACTOR TO THEIR ORIGINAL CONDITION AT NO EXPENSE TO THE OWNER.

7. THE CONTRACTOR SHALL BE RESPONSIBLE FOR PLACING AND MAINTAINING TEMPORARY RESURFACING AND/OR PLATING FOR ALL EXCAVATIONS IN PAVED STREETS AND SIDEWALKS UNTIL PERMANENT RESURFACING IS COMPLETE.

8. JOINTS BETWEEN NEW BITUMINOUS CONCRETE ROADWAY PAVEMENT AND SAW CUT EXISTING PAVEMENT SHALL BE SEALED WITH BITUMEN AND BACK SANDED.

9. THE CONTRACTOR SHALL PROTECT AND SUPPORT ALL EXISTING UTILITY LINES THAT BECOME EXPOSED DUE TO EXCAVATION REQUIRED TO INSTALL THE PROPOSED CONDUIT.

10. THE CONTRACTOR SHALL REPLACE ALL DISTURBED TRAFFIC SIGNAL LOOP DETECTORS TO GOOD WORKING CONDITION AS REQUIRED BY THE LATEST STANDARDS OF THE MUNICIPAL TRAFFIC DEPARTMENT.

11. ALL EXISTING STATE, COUNTY, CITY, AND TOWN LOCATION LINES AND PRIVATE PROPERTY LINES HAVE BEEN ESTABLISHED FROM AVAILABLE INFORMATION AND THEIR EXACT LOCATION ARE NOT GUARANTEED.

12. THE CONTRACTOR SHALL REPLACE ALL PAVEMENT MARKINGS IN THEIR ENTIRETY THAT HAVE BEEN DAMAGED BY TRENCH EXCAVATION OR OPERATIONS OF THE CONTRACTOR WITH SIMILAR COLOR AND SIZE THERMOPLASTIC MARKINGS.

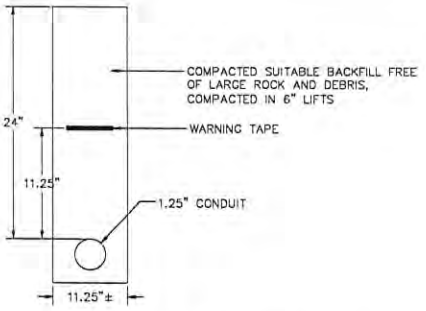

GRASS/DIRT TRENCH AND DUCT BANK INSTALLATION DETAIL

N.T.S.

TRENCH DETAIL NOTES:

1. 24" MAXIMUM FROM TOP OF CONDUIT TO SURFACE.
2. 11.25" FROM TOP OF CONDUIT TO METALLIC WARNING TAPE PLACED ABOVE.
3. REPAIR SIDEWALKS AND WALKWAYS WITH SAME MATERIALS AS EXISTING.

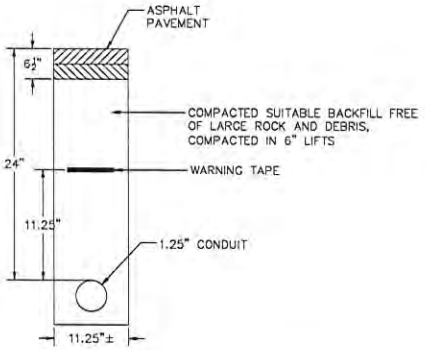

ROADWAY PATCH AND DUCT BANK INSTALLATION DETAIL

N.T.S.

TRENCH DETAIL NOTES:

1. 24" MAXIMUM FROM TOP OF CONDUIT TO SURFACE.
2. 11.25" FROM TOP OF CONDUIT TO METALLIC WARNING TAPE PLACED ABOVE.
3. REPAIR SIDEWALKS AND WALKWAYS WITH SAME MATERIALS AS EXISTING.

LEGEND

ELECTRIC POLE		STREET LIGHT	
JOINT UTILITY POLE		ELECTRIC MH	
LAMP POST		TEL MH	
TRAFFIC LIGHT		CATV MH	
SEWER MH		COMM PEDESTAL	
DRAIN MH		IRRIGATION VALVE	
TELEPHONE MH		WATER METER	
ELECTRIC MH		GAS METER	
CATV MH		SEWER GATE	
WATER MH		GAS GATE	
PAD		WATER GATE	
BUSH/SHRUB		HYDRANT	
RIGHT OF WAY		MAIL BOX	
CULVERT		STONE BOUND	
GUARD RAIL		PARKING METER(S)	
FENCE		STEEL POST	
ELECTRIC VAULT		SIGN POLE	
TRAFFIC MH		UG CABLE MARKER	
PROPOSED MH		TRANSFORMER	
PROPOSED CONDUIT		CATCH BASIN	

NOTE:
EXISTING UTILITIES SHOWN ARE APPROXIMATE AND NOT WARRANTED TO BE CORRECT. THE CONTRACTOR SHALL VERIFY THE LOCATION OF ALL PUBLIC AND PRIVATE UTILITIES PRIOR TO BEGINNING ANY EXCAVATION.

811 DigSafe.com
CALL BEFORE YOU DIG!
UNDERGROUND SERVICE ALERT
72 HOURS NOTICE REQUIRED.
CALL 1-888-DIG-SAFE

PREPARED BY:
AXIS ENGINEERING GROUP

PREPARED FOR:
Consolidated communications

REV #	DESCRIPTION	DATE

TITLE:
DETAILS
NELMAR HEIGHTS,
CLAREMONT, NH

DRAWN BY: EE	PRINT NO: 9 OF 9	PLAN DRAWN ON: D
CHECKED BY: MR	SCALE: 1"=N/A	36" X 24"
DATE: 09/28/21		

LICENSE AGREEMENT

THIS LICENSE AGREEMENT is made as of the day of , 2026 (the "Effective Dates"), by and between the **City of Claremont** (hereinafter the "Grantor"), and **Consolidated Communications** (hereinafter the "Grantee"), a New Hampshire corporation, with a principal place of business at 64 Regional Dr. Concord, NH 03301

WITNESSETH:

WHEREAS Grantor is the owner or has control of a certain public right-of-way as laid out by the municipality and commonly known as Nelmar Heights (hereinafter the "right-of-Way"); and

WHEREAS Grantee is requesting a License for the non-exclusive use beneath and across a designated portion of the Right-of-Way for the installation and operation of infrastructure related to communication and electric utility (hereinafter "Utility") lines (hereinafter the "Equipment") for Grantee's private use; and,

WHEREAS the Claremont City Council approved a License for such installation and operation in its municipal right-of-way and authorized the City Manager to enter into this Licesne Agreeement on_____, 2026.

NOW THEREFORE in consideration of the recitals and the mutual promises contained herein, which are hereby acknowledged, the above-referenced parties agree to the following terms and conditions:

1. Grantor hereby conditionally grants and conveys to Grantee a non-exclusive License to occupy and use a portion of the Right-of Way, both paved and unpaved as further detailed in a certain Site Plan, including all conditions related thereto, as approved by the Claremont Planning Board at its meeting on_____, and filed at the Sullivan County Registry of Deeds Drawer_____, Number_____.

2. This License is granted for the purpose of construction, installation, and maintenance of the Equipment related to and necessary for Grantee's utility operations.

3. Grantor shall provide Grantee with the right to reasonable use of the Right-of-Way to construct, repair, remove, replace, and maintain the Equipment contingent upon receipt by Grantee of all permits and approvals as may be required, including approval of safety plans and an Emergency Action Plan, by Grantor's Fire Department, approval as to location by Grantor's Director of Public Works, and compliance with all applicable codes and regulations.

4. Grantee shall provide Grantor with detailed "as built" drawings of the Equipment locations within the Right-of-Way as soon as is practicable upon the Equipment being operational, but in no event more than 30 days after the operational start-up. Any relocation within or modification of the Equipment in the Right-of-Way as shown on the Site Plan shall require approval by Grantor ***prior*** to any such relocation or modification. The ability of Grantee to

perform such activity shall be contingent upon Grantee providing notice to Grantor of any work to be performed at least 72 hours prior to any such work. Grantee's ability to perform such work shall also be contingent upon Grantor's lack of objection to said work upon receipt of notice. In the event of an emergency situation which requires Grantee's immediate attention to the Equipment, Grantee may perform any necessary work to address the situation; however, Grantee shall notify the Grantor of the circumstances which brought about the emergency situation and the work performed within 24 hours of completion of the work. Grantee shall provide Grantor with revised, detailed "as built" drawings of any relocation of the Equipment in the Right-of-Way upon completion of the work.

5. Upon prior notice to Grantor, Grantee may designate a third party to perform such installation, repair or maintenance work on Grantee's behalf and in Grantee's sole discretion.

6. Grantee's Equipment, as well as the operation, repair, maintenance and/or replacement of said Equipment, shall not interfere with Grantor's municipal operations. Grantee acknowledges that Grantee's use of the Right-of-Way is secondary to Grantor's use of the Right-of-Way. In the event the Grantee's use of the Right-of-Way in any manner interferes with Grantor's municipal operations, Grantor and Grantee shall work collaboratively to address this issue and to reach a mutual agreement as to how to address this interference. If Grantor and Grantee are unable to agree upon a solution to resolve the interference, Grantee shall immediately remove its Equipment causing said interference from the Right-of-Way.

7. Grantee shall provide Grantor proof of property and liability coverage, with limits no less than $1,000,000.00 per occurrence/$2,000,000.00 aggregate, indicating Grantor as a named additional insured. Said insurance shall include endorsements that coverage provided shall not be reduced or cancelled without thirty (30) days advance written notice to Grantor and , if cancellation is for non-payment of premium or other event for which coverage may be terminated on 10-days' notice to the Grantee, Grantee shall be given no less than 10-days' advance written notice. Grantee shall also maintain at its own expense all required insurance coverages related to its employees, contractors, and subcontractors.

8. Grantee will hold Grantor harmless of and from any, and all claims arising out of Grantee's use of the Right-of-Way. The foregoing notwithstanding, it is understood and agrees that this paragraph is not intended to relieve the Grantor from or indemnify the Grantor against any failure by Grantor to satisfy any obligations Grantor may have pursuant to state law, regulation, and local ordinance with respect to the municipal rights-of-way.

9. The License Agreement is personal to Grantee and will terminate automatically if transferred, assigned, or otherwise conveyed to any purchaser for value without the approval of the Claremont City Council, which shall not unreasonably be withheld. Notwithstanding the above, Grantee may assign this Agreement to a related party within Grantee's corporate structure, without consent but with advance written notice to Grantor, so long as the related party does not have a negative financial impact on Grantee.

10. Grantor reserves the right to act with regard to the Right-of- Way in all matters under color State, Federal, or local law or regulation as may be required in response to declared emergency, health, safety, or zoning concerns, code or other violations.

11. Grantee shall be responsible for all costs incurred by Grantor or Grantee related to the construction, repair, removal, replacement, and/or maintenance of the Equipment in the Right-of-Way, including by not limited to restoring Grantor's property to its preconstruction condition.

12. Grantee will be responsible for all applicable duly assessed personal and real estate taxes when due. Failure of Grantee to pay the duly assessed personal and real estate when due shall be cause to terminate said Agreement by the Grantor. Grantee consents to the payment of any duly assessed personal and/or real estate taxes for the use and occupation of the Grantor's property and public rights-of-way.

13. No modification, waiver, or amendment of this Agreement shall be valid unless the same is in writing and signed by the parties. The waiver of any breach of any of the terms and conditions of this Agreement by either party shall not be construed as a continuing waiver of any said terms and conditions or the right to enforce any prior or subsequent breach thereof. This Agreement shall be subject to the laws and the jurisdiction of the Courts of the State of New Hampshire.

IN WITNESS WHEREOF, the Grantor and Grantee have executed this Agreement as of the date first above written.

Grantor: **City of Claremont**

Signed:_____ Date:_____
Nancy L. Bates, City Manager

Grantee: **Consolidated Communications**

Signed: Joyce M Miller Date: 6-15-2026
Duly Authorized

Print Name: Joyce M. Miller

Consolidated communications

PROPOSED CONDUIT INSTALLATION
AT
LINCOLN HEIGHTS
CLAREMONT, NH

LOCUS
N.T.S

INDEX OF DRAWING

SHEET NO.	DESCRIPTION
–	COVER SHEET
01	PROPOSED CONDUIT INSTALLATION
02	GENERAL NOTES AND DETAILS

AXIS
ENGINEERING GROUP
40 Winter St, Suite 320
Rochester, NH 03867
603-403-1511
www.axisegroup.com

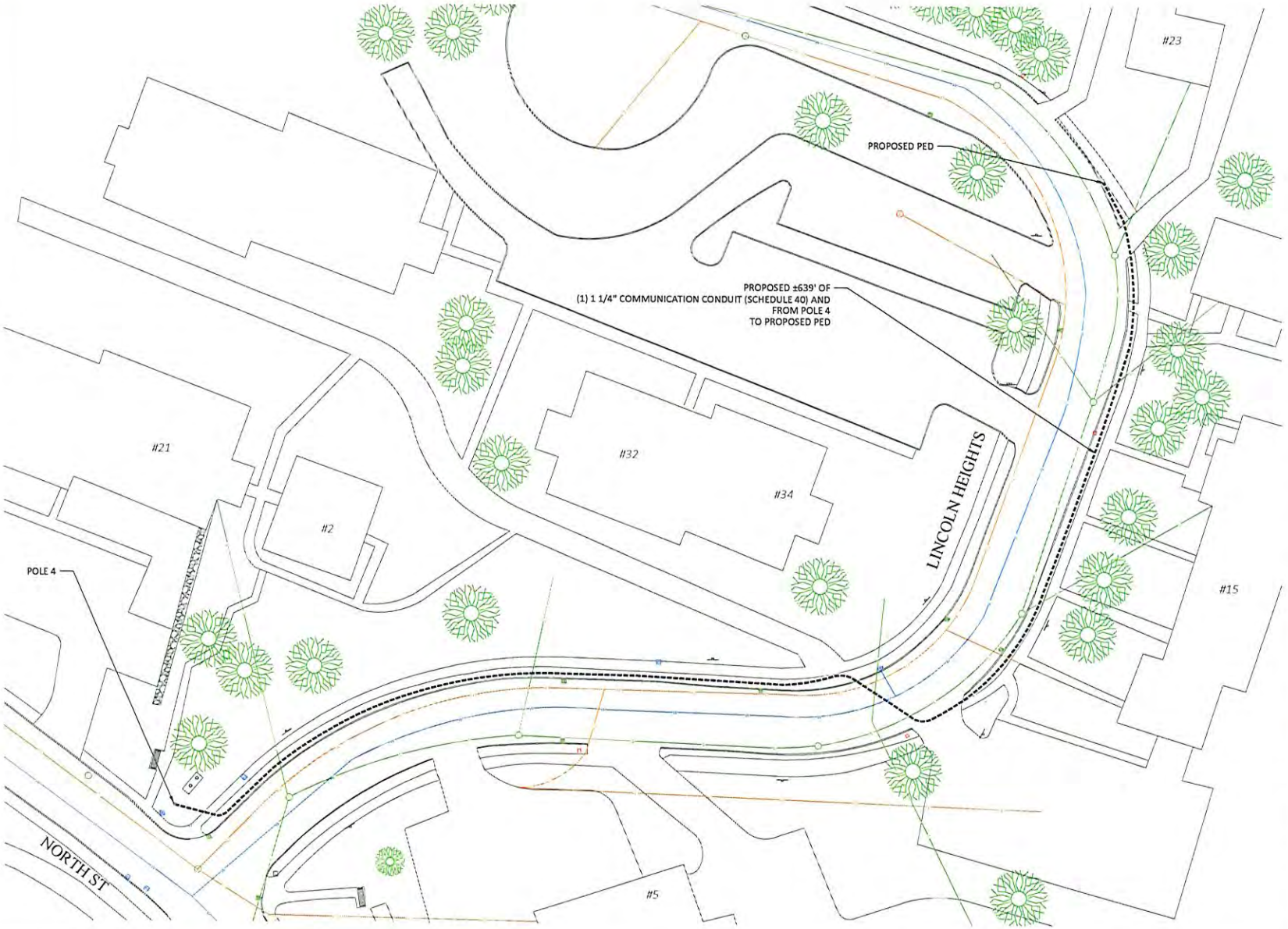

LEGEND

	ELECTRIC POLE		STREET LIGHT
	JOINT UTILITY POLE		ELECTRIC HH
	LAMP POST		TEL HH
	TRAFFIC LIGHT		CATV HH
	SEWER MH		COMM PEDESTAL
	DRAIN MH		IRRIGATION VALVE
	TELEPHONE MH		WATER METER
	ELECTRIC MH		GAS METER
	CATV MH		SEWER GATE
	WATER MH		GAS GATE
	PAD		WATER GATE
	BUSH/SHRUB		HYDRANT
	RIGHT OF WAY		MAIL BOX
	CULVERT		STONE BOUND
	GUARD RAIL		PARKING METER(S)
	FENCE		STEEL POST
	ELECTRIC VAULT		SIGN POLE
	TRAFFIC HH		UG CABLE MARKER
	PROPOSED HH		TRANSFORMER
	PROPOSED CONDUIT		CATCH BASIN

NOTE:
EXISTING UTILITIES SHOWN ARE APPROXIMATE AND NOT WARRANTED TO BE CORRECT. THE CONTRACTOR SHALL VERIFY THE LOCATION OF ALL PUBLIC AND PRIVATE UTILITIES PRIOR TO BEGINNING ANY EXCAVATION.

811 DigSafe.com
CALL BEFORE YOU DIG!
UNDERGROUND SERVICE ALERT
72 HOURS NOTICE REQUIRED.
CALL 1-888-DIG-SAFE

PREPARED BY:
AXIS ENGINEERING GROUP

PREPARED FOR:
Consolidated communications

REV #	DESCRIPTION	DATE

TITLE:
PROPOSED CONDUIT INSTALLATION
LINCOLN HEIGHTS
CLAREMONT, NH

DRAWN BY: AH	PRINT NO: 1 OF 2	PLAN DRAWN ON: D
CHECKED BY: MB	SCALE: 1" = 20'	36" X 24"
DATE: 5/19/2026		

GENERAL NOTES

1. THE LOCATIONS OF EXISTING UNDERGROUND UTILITIES ARE SHOWN IN AN APPROXIMATE WAY ONLY AND HAVE NOT BEEN INDEPENDENTLY VERIFIED BY THE OWNER OR ITS REPRESENTATIVE. THE CONTRACTOR SHALL DETERMINE THE EXACT LOCATION OF ALL EXISTING UTILITIES BEFORE COMMENCING WORK, AND SHALL BE FULLY RESPONSIBLE FOR ANY AND ALL DAMAGES WHICH MIGHT BE OCCASIONED BY THE CONTRACTOR'S FAILURE TO EXACTLY LOCATE AND PRESERVE ANY AND ALL UNDERGROUND UTILITIES.

2. WHERE AN EXISTING UTILITY IS FOUND TO CONFLICT WITH THE PROPOSED WORK, THE LOCATION, ELEVATION AND SIZE OF THE UTILITY SHALL BE ACCURATELY DETERMINED WITHOUT DELAY BY THE CONTRACTOR, AND THE INFORMATION FURNISHED TO THE ENGINEER FOR RESOLUTION OF THE CONFLICT.

3. THE CONTRACTOR SHOULD MAINTAIN A SEPARATION OF 18 INCHES MIN. WHEN CROSSING EXISTING WATER, SEWER, OR DRAIN FACILITIES.

4. THE CONTRACTOR SHALL MAKE ALL ARRANGEMENTS FOR THE ALTERATION AND ADJUSTMENT OF GAS, ELECTRIC, TELEPHONE AND ANY OTHER PRIVATE UTILITIES BY THE UTILITY COMPANY.

5. THE CONTRACTOR SHALL NOT DISTURB PUBLIC TREES AND SHRUBS.

6. AREAS OUTSIDE THE LIMITS OF PROPOSED WORK DISTURBED BY THE CONTRACTOR'S OPERATIONS SHALL BE RESTORED BY THE CONTRACTOR TO THEIR ORIGINAL CONDITION AT NO EXPENSE TO THE OWNER.

7. THE CONTRACTOR SHALL BE RESPONSIBLE FOR PLACING AND MAINTAINING TEMPORARY RESURFACING AND/OR PLATING FOR ALL EXCAVATIONS IN PAVED STREETS AND SIDEWALKS UNTIL PERMANENT RESURFACING IS COMPLETE.

8. JOINTS BETWEEN NEW BITUMINOUS CONCRETE ROADWAY PAVEMENT AND SAW CUT EXISTING PAVEMENT SHALL BE SEALED WITH BITUMEN AND BACK SANDED.

9. THE CONTRACTOR SHALL PROTECT AND SUPPORT ALL EXISTING UTILITY LINES THAT BECOME EXPOSED DUE TO EXCAVATION REQUIRED TO INSTALL THE PROPOSED CONDUIT.

10. THE CONTRACTOR SHALL REPLACE ALL DISTURBED TRAFFIC SIGNAL LOOP DETECTORS TO GOOD WORKING CONDITION AS REQUIRED BY THE LATEST STANDARDS OF THE MUNICIPAL TRAFFIC DEPARTMENT.

11. ALL EXISTING STATE, COUNTY, CITY, AND TOWN LOCATION LINES AND PRIVATE PROPERTY LINES HAVE BEEN ESTABLISHED FROM AVAILABLE INFORMATION AND THEIR EXACT LOCATION ARE NOT GUARANTEED.

12. THE CONTRACTOR SHALL REPLACE ALL PAVEMENT MARKINGS IN THEIR ENTIRETY THAT HAVE BEEN DAMAGED BY TRENCH EXCAVATION OR OPERATIONS OF THE CONTRACTOR WITH SIMILAR COLOR AND SIZE THERMOPLASTIC MARKINGS.

* - ITEM SHOWN ON UTILITY RECORDS, BUT NOT FOUND IN FIELD.

~ - ITEM FOUND IN FIELD, BUT NOT IN UTILITY RECORDS.

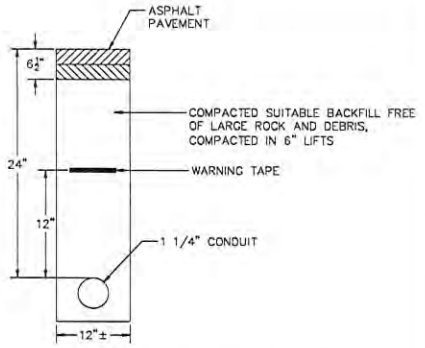

ROADWAY PATCH AND DUCT BANK INSTALLATION DETAIL

N.T.S.

TRENCH DETAIL NOTES:

1. 24" MAXIMUM FROM TOP OF CONDUIT TO SURFACE.
2. 12" FROM TOP OF CONDUIT TO METALLIC WARNING TAPE PLACED ABOVE.
3. REPAIR SIDEWALKS AND WALKWAYS WITH SAME MATERIALS AS EXISTING.

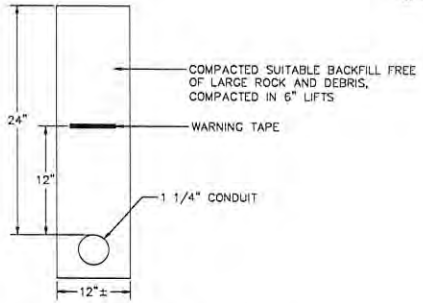

GRASS/DIRT TRENCH AND DUCT BANK INSTALLATION DETAIL

N.T.S.

TRENCH DETAIL NOTES:

1. 24" MAXIMUM FROM TOP OF CONDUIT TO SURFACE.
2. 12" FROM TOP OF CONDUIT TO METALLIC WARNING TAPE PLACED ABOVE.
3. REPAIR SIDEWALKS AND WALKWAYS WITH SAME MATERIALS AS EXISTING.

NOTE:
EXISTING UTILITIES SHOWN ARE APPROXIMATE AND NOT WARRANTED TO BE CORRECT. THE CONTRACTOR SHALL VERIFY THE LOCATION OF ALL PUBLIC AND PRIVATE UTILITIES PRIOR TO BEGINNING ANY EXCAVATION.

811 DigSafe.com
CALL BEFORE YOU DIG!
UNDERGROUND SERVICE ALERT
72 HOURS NOTICE REQUIRED.
CALL 1-888-DIG-SAFE

PREPARED BY
AXIS ENGINEERING GROUP

PREPARED FOR
Consolidated communications

REV #	DESCRIPTION	DATE

TITLE
GENERAL NOTES AND DETAILS
LINCOLN HEIGHTS
CLAREMONT, NH

DRAWN BY AH	PRINT NO. 2 OF 2	PLAN DRAWN ON: D (36" X 24")
CHECKED BY MB	SCALE N/A	
DATE 5/17/2024		

LICENSE AGREEMENT

THIS LICENSE AGREEMENT is made as of the day of , 2026 (the "Effective Dates"), by and between the **City of Claremont** (hereinafter the "Grantor"), and **Consolidated Communications** (hereinafter the "Grantee"), a New Hampshire corporation, with a principal place of business at 64 Regional Dr. Concord, NH 03301.

WITNESSETH:

WHEREAS Grantor is the owner or has control of a certain public right-of-way as laid out by the municipality and commonly known as Lincoln Heights (hereinafter the "right-of-Way"); and

WHEREAS Grantee is requesting a License for the non-exclusive use beneath and across a designated portion of the Right-of-Way for the installation and operation of infrastructure related to communication and electric utility (hereinafter "Utility") lines (hereinafter the "Equipment") for Grantee's private use; and,

WHEREAS the Claremont City Council approved a License for such installation and operation in its municipal right-of-way and authorized the City Manager to enter into this Licesne Agreeement on_____, 2026.

NOW THEREFORE in consideration of the recitals and the mutual promises contained herein, which are hereby acknowledged, the above-referenced parties agree to the following terms and conditions:

1. Grantor hereby conditionally grants and conveys to Grantee a non-exclusive License to occupy and use a portion of the Right-of Way, both paved and unpaved as further detailed in a certain Site Plan, including all conditions related thereto, as approved by the Claremont Planning Board at its meeting on_____, and filed at the Sullivan County Registry of Deeds Drawer_____, Number_____.

2. This License is granted for the purpose of construction, installation, and maintenance of the Equipment related to and necessary for Grantee's utility operations.

3. Grantor shall provide Grantee with the right to reasonable use of the Right-of-Way to construct, repair, remove, replace, and maintain the Equipment contingent upon receipt by Grantee of all permits and approvals as may be required, including approval of safety plans and an Emergency Action Plan, by Grantor's Fire Department, approval as to location by Grantor's Director of Public Works, and compliance with all applicable codes and regulations.

4. Grantee shall provide Grantor with detailed "as built" drawings of the Equipment locations within the Right-of-Way as soon as is practicable upon the Equipment being operational, but in no event more than 30 days after the operational start-up. Any relocation within or modification of the Equipment in the Right-of-Way as shown on the Site Plan shall require approval by Grantor ***prior*** to any such relocation or modification. The ability of Grantee to

perform such activity shall be contingent upon Grantee providing notice to Grantor of any work to be performed at least 72 hours prior to any such work. Grantee's ability to perform such work shall also be contingent upon Grantor's lack of objection to said work upon receipt of notice. In the event of an emergency situation which requires Grantee's immediate attention to the Equipment, Grantee may perform any necessary work to address the situation; however, Grantee shall notify the Grantor of the circumstances which brought about the emergency situation and the work performed within 24 hours of completion of the work. Grantee shall provide Grantor with revised, detailed "as built" drawings of any relocation of the Equipment in the Right-of-Way upon completion of the work.

5. Upon prior notice to Grantor, Grantee may designate a third party to perform such installation, repair or maintenance work on Grantee's behalf and in Grantee's sole discretion.

6. Grantee's Equipment, as well as the operation, repair, maintenance and/or replacement of said Equipment, shall not interfere with Grantor's municipal operations. Grantee acknowledges that Grantee's use of the Right-of-Way is secondary to Grantor's use of the Right-of-Way. In the event the Grantee's use of the Right-of-Way in any manner interferes with Grantor's municipal operations, Grantor and Grantee shall work collaboratively to address this issue and to reach a mutual agreement as to how to address this interference. If Grantor and Grantee are unable to agree upon a solution to resolve the interference, Grantee shall immediately remove its Equipment causing said interference from the Right-of-Way.

7. Grantee shall provide Grantor proof of property and liability coverage, with limits no less than $1,000,000.00 per occurrence/$2,000,000.00 aggregate, indicating Grantor as a named additional insured. Said insurance shall include endorsements that coverage provided shall not be reduced or cancelled without thirty (30) days advance written notice to Grantor and , if cancellation is for non-payment of premium or other event for which coverage may be terminated on 10-days' notice to the Grantee, Grantee shall be given no less than 10-days' advance written notice. Grantee shall also maintain at its own expense all required insurance coverages related to its employees, contractors, and subcontractors.

8. Grantee will hold Grantor harmless of and from any, and all claims arising out of Grantee's use of the Right-of-Way. The foregoing notwithstanding, it is understood and agrees that this paragraph is not intended to relieve the Grantor from or indemnify the Grantor against any failure by Grantor to satisfy any obligations Grantor may have pursuant to state law, regulation, and local ordinance with respect to the municipal rights-of-way.

9. The License Agreement is personal to Grantee and will terminate automatically if transferred, assigned, or otherwise conveyed to any purchaser for value without the approval of the Claremont City Council, which shall not unreasonably be withheld. Notwithstanding the above, Grantee may assign this Agreement to a related party within Grantee's corporate structure, without consent but with advance written notice to Grantor, so long as the related party does not have a negative financial impact on Grantee.

10. Grantor reserves the right to act with regard to the Right-of- Way in all matters under color State, Federal, or local law or regulation as may be required in response to declared emergency, health, safety, or zoning concerns, code or other violations.

11. Grantee shall be responsible for all costs incurred by Grantor or Grantee related to the construction, repair, removal, replacement, and/or maintenance of the Equipment in the Right-of-Way, including by not limited to restoring Grantor's property to its preconstruction condition.

12. Grantee will be responsible for all applicable duly assessed personal and real estate taxes when due. Failure of Grantee to pay the duly assessed personal and real estate when due shall be cause to terminate said Agreement by the Grantor. Grantee consents to the payment of any duly assessed personal and/or real estate taxes for the use and occupation of the Grantor's property and public rights-of-way.

13. No modification, waiver, or amendment of this Agreement shall be valid unless the same is in writing and signed by the parties. The waiver of any breach of any of the terms and conditions of this Agreement by either party shall not be construed as a continuing waiver of any said terms and conditions or the right to enforce any prior or subsequent breach thereof. This Agreement shall be subject to the laws and the jurisdiction of the Courts of the State of New Hampshire.

IN WITNESS WHEREOF, the Grantor and Grantee have executed this Agreement as of the date first above written.

Grantor: **City of Claremont**

Signed:_____ Date:_____
Nancy L. Bates, City Manager

Grantee: **Consolidated Communications**

Signed: Jaye Mella Date: 6-15-2026
Duly Authorized

Print Name: Jaye M. Tart

Finance Office
58 Opera House Square
Claremont, New Hampshire 03743
Ph: (603) 542-7002
Fax: (603) 542-7014
Email: finance@claremontnh.com
www.claremontnh.com

Memorandum

To: Honorable Mayor, Assistant Mayor, and City Council

From: Rick Bergeron, Interim City Manager

Date: 2026-09-09

Re: PILOT – Kearsarge Claremont LLC

Attached is a PILOT agreement between Kearsarge Claremont, LLC and the City of Claremont. This PILOT is for a renewable solar power electric generating facility to be located at or near River Road (map 186, lot 18).

An affirmative vote on the attached motion is needed for me to execute the PILOT agreement.

Motion to Approve PILOT Agreement

The Claremont City Council, pursuant to RSA 72:74 and after public hearing duly noticed, approves the proposed Payment in Lieu of Tax Agreement (PILOT) between the City and Kearsarge Claremont, LLC develop a renewable solar power electric generating facility (the "Facility") to be located at or near River Road (map 186, lot 18) (the Property), and further authorizes the City Manager or his designees to take all such actions as may be necessary to execute said PILOT and implement this motion in accordance with state law and regulation.

AYES	_____	ABSENT	_____
NAYS	_____	ABSTAIN	_____

CERTIFICATION

I, Julia A. Bizzarro, the undersigned officer, hereby certify that the foregoing Motion was adopted by the City Council of the City of Claremont, New Hampshire, at a meeting, duly noticed, and held on Wednesday, September 9, 2026.

_____
Julia A. Bizzarro, Clerk to the Council

PAYMENT IN LIEU OF TAXES AGREEMENT BETWEEN
The City of Claremont AND Kearsarge Claremont LLC

This Payment in Lieu of Taxes (PILOT) Agreement (hereafter "Agreement") is made this _____ day of _____ 2026, under New Hampshire Revised Statutes Annotated (NHRSA) § 72:74, between the City of Claremont, New Hampshire ("City") and Kearsarge Claremont LLC ("Taxpayer"), a Massachusetts Limited Liability Company, with a business address at 1380 Soldiers Field Road, Suite 3900, Boston, MA 02135.

Background

Taxpayer seeks to develop a renewable solar power electric generating facility (the "Facility") to be located at or near River Road (map 186, lot 18) Taxpayer expects the final installed Nameplate Capacity to be approximately .814 megawatts (MW/Ac). For the purposes of this Agreement, the term "Nameplate Capacity" shall mean the sum of all of the nameplate capacities for the total solar inverters installed and operating at the Facility. Once the project has reached commercial operation, defined below, the parties will sign a letter amendment to this Agreement specifying the actual Nameplate Capacity of the Facility (if applicable).

The Facility will be built on land leased by Taxpayer, identified on City tax maps as tax parcels 186-18 (the "Property").

Under its lease agreements with landowners, Taxpayer will be responsible for the payment of local ad valorem real estate taxes on Facility structures and other improvements under NHRSA Chapter 72 (including the taxes on the value of the underlying land as defined by the approved (current or future) planning board site plan).

The Facility will be a "renewable generation facility", as defined in NHRSA §72:73 and NHRSA 374-F:3, V(f)(3). Under NHRSA §72:74, the owner of a renewable generation facility and the governing body of the municipality in which the facility is located may, enter into a voluntary agreement to make payments in lieu of taxes.

Taxpayer and the City desire to enter into such a PILOT agreement under NHRSA §72:74.

NOW THEREFORE, the parties hereto agree as follows:

Terms and Conditions

1. Payments in Lieu of Taxes. Taxpayer will make payments in lieu of taxes to the City for each tax year (April 1 to March 31) during the term of this Agreement, in accordance with Sections 3 and 4 below. These PILOT payments will be in lieu of any and all ad valorem real estate taxes otherwise payable under NHRSA Chapter 72, including all City, county, and local school district taxes, assessed on the Facility.

2. Term. Mindful of RSA 72:74, VI and VII, the parties have determined that a long-term agreement providing predictability of tax revenues and expenses would be advantageous to both the City and Taxpayer. Accordingly, the term of this Agreement shall be 20 (twenty) years as described in Section 4 below. If the Facility fails to achieve commercial operation by February 13, 2028, this Agreement shall be deemed void and of no effect. For the purposes of this Agreement, the term "commercial operation" shall be deemed to have occurred once (a) the solar power electric generating facility has been commissioned and accepted by Taxpayer in accordance with applicable commissioning and inspection procedures (b) the Facility has been interconnected to the utility electric grid, and (c) Taxpayer has commenced the sale of energy from the Facility on a commercial (rather than test) basis to one or more purchasers. The date on which Taxpayer commences energy sales on a commercial basis shall be deemed the "Commercial Operation Date." Taxpayer shall give the City written notice of said Commercial Operation Date within seven (7) days after it occurs, together with a proposed letter amendment confirming the Facility's actual Nameplate Capacity.

3. PILOT Payments for 20-Year Operating Term. Subject to possible adjustments up or down under Section 4 below, annual PILOT payments to the City for the 20-year Operating Term shall be at the rate of $3,400 per megawatt AC of Nameplate Capacity (the "Initial Rate") with a minimum of $2,700 per year payment regardless of the Nameplate Capacity, in the tax year that begins on April 1 following the commercial operation date (the "PILOT Commencement Date"). Until the PILOT Commencement Date, ad valorem taxes shall be payable on the Facility.

If the Facility's actual Commercial Operation Date occurs after March 31, then the schedule of annual PILOT payments during the Operating Term covered by this Section 3 will be amended to reflect that the first year of the Operating Term will be the tax year following the tax year in which commercial operation begins.

4. Potential Adjustment of PILOT Payments.

(a) Increase in Capacity. In the event that some or all of the Facility's increased in the nameplate capacity during the term of the Agreement in such a way as to increase the Facility's total capacity, then PILOT payments beginning in the next tax year will be adjusted upwards.

(b) Reduction in Capacity: If the Facility's installed and operating capacity as of April 1 in any tax year is materially reduced (due to causes beyond Taxpayer's control) from the previous tax year due to: (i) damage caused by natural forces, (ii) operational restrictions caused by a change in law, regulation, ordinance, or industry management standards, (iii) decommissioning and removal of inverters, or (iv) the permanent cessation of the Facility's operations, then the PILOT payment will be adjusted downward based on the total actual installed and operating Nameplate Capacity after the reduction in capacity, or in the case of clause (iv) above, this Agreement will terminate, in each event as of the beginning in the next tax year

5. Payment of Amounts Due. Taxpayer shall make the PILOT payments due hereunder for any given tax year in the Operating Term to the City in two equal installments, at the City Tax Collector's office, on July 1st and December 1st. Interest shall accrue on any PILOT payment not paid when due at the annual rate described in RSA 76:13.

6. Non-Payment. Non-payment of any payment due the City shall constitute a default. Notice of non-payment or any other default shall be provided to Taxpayer (and to Taxpayer's Lender, as further specified in Section 7 below), in the manner and at the address provided for Notices in Section 9 of this Agreement. Taxpayer shall have 30 days to cure the default after receiving such notice. In the event the condition causing the default is not cured within 30 days, Cities remedies include, without limitation, any and all of: (a)the City may commence an action to collect any non-payment under RSA 80:50, (b) seek specific performance of a non-monetary default or (c) proceed against the real estate, including the Property and the Facility, under RSA 80:58-80. It shall not be a defense to such a proceeding that Taxpayer is obligated under this Agreement to make payments in lieu of taxes rather than taxes.

7. Lender's Right to Cure. The City shall send a copy of any notice of default sent to Taxpayer to Taxpayer's Lender by certified mail at the same time such notice is sent to Taxpayer, and no such notice of default to Taxpayer shall be effective unless and until a copy of such notice has been delivered to Taxpayer's Lender. Taxpayer's Lender shall have the same time and rights to cure any default as Taxpayer, and the City shall accept a cure by Taxpayer's Lender as if such cure had been made by Taxpayer. Taxpayer shall provide written notice to the City as to the name and address of Taxpayer's Lender for such notices to be sent.

8. Other Taxes Not Covered. This Agreement covers only ad valorem real estate taxes payable under NHRSA Chapter 72 and Chapter 76 on the Facility including the Statewide Education Property Tax. It does not include or

cover other local, state, or federal taxes which may be payable on account of Facility revenues or activities, including the Land Use Change Tax, Timber Tax, State Utility Property Tax, Business Enterprise Tax, or Federal Income Tax. Any portion of the Property not occupied by the Facility under the Taxpayer's lease will remain subject to ad valorem real estate taxes.

9. Notices. Any notice to be provided under this Agreement shall be in writing and shall be deemed to have been given when delivered personally or by certified mail at the following addresses:

For the City: City of Claremont, 58 Opera House Square, Claremont NH 03743, Attn. City Manager.

For Taxpayer: Kearsarge Claremont LLC, 1380 Soldiers Field Road, Suite 2900, Boston, MA 02135.

In the event of a change in the address of any party listed above, the responsible signatory (Taxpayer in the case of itself, its Lender and/or its counsel) shall give the other party prompt written notice of such change of address, which shall be effective upon receipt.

10. Notice to Lessor. As a condition to this agreement, Taxpayer shall give the City evidence of delivery of notice to the lessor and the owner of the fee interest in the Property as required by RSA 72:74 I.

12. Miscellaneous.

(a) This Agreement shall be construed and interpreted in accordance with the laws of the State of New Hampshire. In the event any term of this Agreement or the application of any such term shall be held invalid by any court having jurisdiction, the other terms of this Agreement and their application shall not be affected thereby and shall remain in full force and effect, provided that the remaining terms continue to preserve the essential economic terms of this Agreement.

(b) The terms and provisions contained in this Agreement constitute the final Agreement between the parties with respect to this Agreement and supersede all previous communications, representations or agreements, either verbal or written. No modification or amendment to this Agreement shall be valid unless it is in writing and signed by both parties hereto.

(c) Taxpayer shall have the right, in its sole discretion, to assign this Agreement to any bona fide purchaser, transferee, or assignee, provided that said purchaser, transferee or assignee has the financial, managerial, and technical capacity to construct and operate the Facility as contemplated by the parties hereto. All covenants, agreements, terms and conditions contained in this Agreement shall apply to and be binding upon the parties, their assigns and successors. Taxpayer shall provide written notice to the City of any sale, transfer, or assignment.

(d) Section titles or subject headings in this Agreement are provided for the purpose of reference and convenience only and are not intended to affect the meaning of the contents or scope of this Agreement.

(e) This Agreement may be executed in multiple counterparts, each of which shall be deemed an original instrument, but all of such counterparts together will constitute but one Agreement.

City of Claremont

By:
Name:
Date:

Kearsarge Claremont LLC

By:
Name:

Date:

CITY OF
CLAREMONT

Department of Public Works
8 Grandview Street
Claremont, New Hampshire 03743
Ph: (603) 542-7020
Email: dpw@claremontnh.com

MEMORANDUM

To: City Manager Bergeron
From: Alex Gleeson, Director of Public Works
Date: September 1, 2026
Subject: Sewer Department Vehicle Lease Request – Replacement of Truck #29

City Manager Bergeron,

The Department of Public Works requests authorization to lease a replacement for Truck #29 at a total purchase price of $73,313.00 which is appropriated in the current fiscal year rents and leases line.

Truck #29 is a 2015 Ford F-350 diesel pickup truck equipped with a front plow and liftgate. The vehicle currently has 88,085 miles and has experienced numerous mechanical issues, particularly with its diesel engine and related components. Due to the vehicle's age, condition, and increasing maintenance needs, replacement is recommended.

The truck will be replaced with an unleaded gasoline-powered Ford F-350 pickup truck equipped with a front plow and liftgate. The gasoline-powered replacement is expected to reduce the maintenance complications associated with the current diesel unit while maintaining the operational capabilities required by the Department.

Following the bid review, the Department contacted the apparent low bidder to clarify its proposal of $69,074.00. The proposal did not include the extended warranty, spray-in bedliner, or all-weather floor mats required as part of the vehicle package. The vendor also indicated that it would not honor its original proposed price once these items were added.

The additional costs included $629.00 for the spray-in bedliner, $229.00 for the all-weather floor mats, and $5,905.00 for the specified extended warranty. These additions increased the apparent low bidder's total package price to $75,837.00.

Because the revised price exceeded the second-lowest responsive proposal of $73,313.00, the Department awarded the purchase to Ford of Claremont. This proposal includes the vehicle and all required equipment and represents a savings of $2,524.00 compared with the revised price from the original low bidder.

The Department respectfully requests approval to proceed with a 5-year lease of the replacement Truck #29 from Ford of Claremont for $73,313.00, in accordance with the City's vehicle and

CITY OF
CLAREMONT

Department of Public Works
8 Grandview Street
Claremont, New Hampshire 03743
Ph: (603) 542-7020
Email: dpw@claremontnh.com

equipment leasing program. The anticipated interest rate for this 5 year lease is 5.03% with an annual payment of $16,130.

Respectfully,

Alex Gleeson

Director, DPW

City of Claremont

RESOLUTION 2027-18

DPW FY27 Master Lease Authorization to Borrow

BE IT RESOLVED by the City Council of the City of Claremont, New Hampshire after public hearing duly noticed that the City Manager or his designee; and

WHEREAS certain equipment and fleet vehicles in the Department of Public Works were scheduled to be acquired or replaced in 2027, with funds having been raised and appropriated therefore in the 2027 operating budget; and

WHEREAS the City is prepared to lease a vehicle for the Department of Public Works through a master lease agreement;

NOW THEREFORE BE IT RESOLVED that the City Manager or his designees are hereby authorized to enter into a master lease/purchase agreement with a principal amount of $73,313.00 for the lease of a Department of Public Works vehicle, said costs, including interest, for the first annual payment having been raised and appropriated in the 2027 budget (with no impact on the tax rate); and

BE IT FURTHER RESOLVED the proposed master lease agreement shall contain a termination clause in the event of non-appropriation of sufficient funds for any year subsequent to the first year of the agreement. *(Majority vote required)*

Dated this 9th day of September, 2026 the City of Claremont, County of Sullivan, State of New Hampshire.

AYES	_____	ABSENT	_____
NAYS	_____	ABSTAIN	_____

CERTIFICATION

I, Julia A. Bizzarro, the undersigned officer, hereby certify that the foregoing Resolution was adopted by the City Council of the City of Claremont, New Hampshire, at a meeting, duly noticed, and held on September 9, 2026.

_____

Julia A. Bizzarro, Clerk to the Council